HEIKO SERVICE MANUAL

Wall Mounted Type

DC Inverter FREE MATCH N-Series

Model No.M2T050-D1

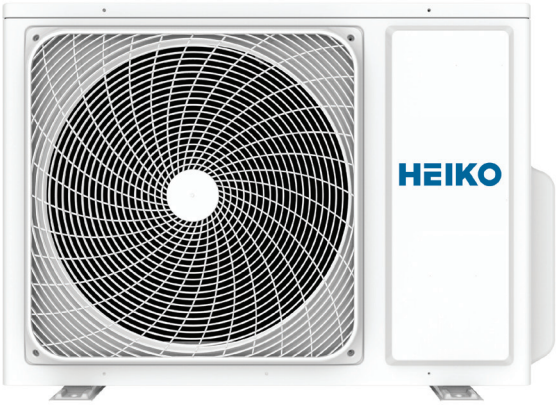

⚠WARNING

This service information is designed for experienced repair technicians only and is not designed for use by the general public.
It does not contain warnings or cautions to advise non-technical individuals of potential dangers in attempting to service a product.
Products powered by electricity should be serviced or repaired only by experienced professional technicians. Any attempt to service or Repair the product or products dealt with in this service information by anyone else could result in serious injury or death

Version：V1 Date：2020-01- 16

Contents

1. Introduction 1
2. Specifications.....7
3. Sensors list 8
4. Piping diagrams 9
5. Operation range.....10
6. Printed Circuit Board Connector Wiring Diagram 11
7. Functions and Control.....16
8. Dimensional drawings.....31
9. Conter of gravity 31
10. Service Diagnosis.....32
11. Performance and cerves diagrams.....48
12. Sound level 64
13. Circuit diagrams.....65

1 Introduction

1.1 Model name explanation

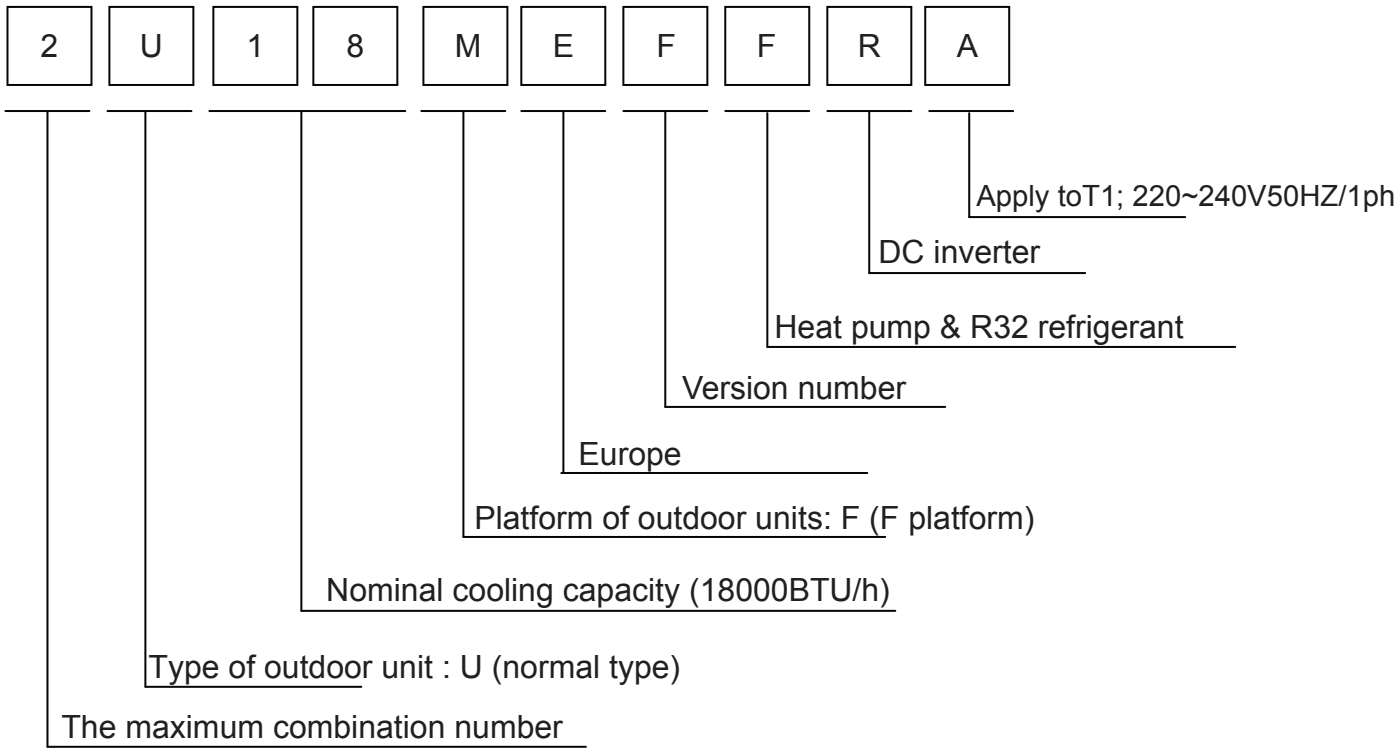

1.2 Safety Cautions

Be sure to read the following safety cautions before conducting repair work.

The caution items are classified into “Warning” and “Caution”. The “Warning” items are especially important since they can lead to death or serious injury if they are not followed closely. The “Caution” items can also lead

to serious accidents under some conditions if they are not followed. Therefore, be sure to observe all the safety

caution items described below.

About the pictograms

△ This symbol indicates an item for which caution must be exercised.
The pictogram shows the item to which attention must be paid.

○ This symbol indicates a prohibited action.
The prohibited item or action is shown inside or near the symbol.

● This symbol indicates an action that must be taken, or an instruction.
The instruction is shown inside or near the symbol.

After the repair work is complete, be sure to conduct a test operation to ensure that the equipment operates Normally, and explain the cautions for operating the product to the customer.

1.2.1 Caution in Repair

Warning	
Be sure to disconnect the power cable plug from the plug socket before disassembling the equipment for a repair. Working on the equipment that is connected to a power supply can cause an electrical shook. If it is necessary to supply power to the equipment to conduct the repair or inspecting the circuits, do not touch any electrically charged sections of the equipment.	
If the refrigerant gas discharges during the repair work, do not touch the discharging refrigerant gas .The refrigerant gas can cause frostbite.	
When disconnecting the suction or discharge pipe of the compressor at the welded section, release the refrigerant gas completely at a well-ventilated place first. If there is a gas remaining inside the compressor , the refrigerant gas or cooling machine oil discharges when the pipe is disconnected, and it can cause injury.	
If the refrigerant gas leaks during the repair work, ventilate the area. The refrigerant gas can generate toxic gases when it contacts flames.	
The step-up capacitor supplies high-voltage electricity to the electrical components of the outdoor unit. Be sure to discharge the capacitor completely before conducting repair work . A charged capacitor can cause an electrical shock.	
Do not start or stop the air conditioner operation by plugging or unplugging the power cable plug. Plugging or unplugging the power cable plug to operate the equipment can cause an electrical shock or fire.	

Warning	
Do not repair the electrical components with wet hands . Working on the equipment with wet hands can cause an electrical shock	
Do not clean the air conditioner by splashing water. Washing the unit with water can cause an electrical shock.	
Be sure to provide the grounding when repairing the equipment in a humid or wet place, to avoid electrical shock.	
Be sure to turn off the power switch and unplug the power cable when cleaning the equipment. The internal fan rotates at a high speed, and cause injury.	
Do not tilt the unit when removing it. The water inside the unit can spill and wet the furniture and floor.	
Be sure to check that the cooling cycle section has cooled down sufficiently before conducting repair work. Working on the unit when the cooling cycle section is hot can cause burns.	
Use the welder in a well-ventilated place. Using the welder in an enclosed room can cause oxygen deficiency.	

1.2.2 Cautions Regarding Products after Repair

Warning	
Be sure to use parts listed in the service parts list of the applicable model and appropriate tools to conduct repair work. Never attempt to modify the equipment. The use of inappropriate parts or tools can cause an electrical shock, excessive heat generation or fire.	
When relocating the equipment, make sure that the new installation site has sufficient strength to withstand the weight of the equipment. If the installation site does not have sufficient strength and if the installation work is not conducted securely, the equipment can fall and cause injury.	
Be sure to install the product correctly by using the provided standard installation frame. Incorrect use of the installation frame and improper installation can cause the equipment to fall, resulting in injury.	For integral units only
Be sure to install the product securely in the installation frame mounted on a window frame. If the unit is not securely mounted, it can fall and cause injury.	For integral units only

Warning	
Be sure to use an exclusive power circuit for the equipment, and follow the technical standards related to the electrical equipment, the internal wiring regulations and the instruction manual for installation when conducting electrical work. Insufficient power circuit capacity and improper electrical work can cause an electrical shock or fire.	
Be sure to use the specified cable to connect between the indoor and outdoor units. Make the connections securely and route the cable properly so that there is no force pulling the cable at the connection terminals. Improper connections can cause excessive heat generation or fire.	
When connecting the cable between the indoor and outdoor units, make sure that the terminal cover does not lift off or dismount because of the cable. If the cover is not mounted properly, the terminal connection section can cause an electrical shock, excessive heat generation or fire.	
Do not damage or modify the power cable. Damaged or modified power cable can cause an electrical shock or fire. Placing heavy items on the power cable, and heating or pulling the power cable can damage the cable.	
Do not mix air or gas other than the specified refrigerant (R-410A / R22) in the refrigerant system. If air enters the cooling system, an excessively high pressure results, causing equipment damage and injury.	
If the refrigerant gas leaks, be sure to locate the leak and repair it before charging the refrigerant. After charging refrigerant, make sure that there is no refrigerant leak. If the leak cannot be located and the repair work must be stopped, be sure to perform pump-down and close the service valve, to prevent the refrigerant gas from leaking into the room. The refrigerant gas itself is harmless, but it can generate toxic gases when it contacts flames, such as fan and other heaters, stoves and ranges.	.
When replacing the coin battery in the remote controller, be sure to disposed of the old battery to prevent children from swallowing it. If a child swallows the coin battery, see a doctor immediately.	

Caution	
Installation of a leakage breaker is necessary in some cases depending on the conditions of the installation site, to prevent electrical shocks.	

Do not install the equipment in a place where there is a possibility of combustible gas leaks. If a combustible gas leaks and remains around the unit, it can cause a fire.	
Be sure to install the packing and seal on the installation frame properly. If the packing and seal are not installed properly, water can enter the room and wet the furniture and floor.	

1.2.3 Inspection after Repair

Warning	
Check to make sure that the power cable plug is not dirty or loose, then insert the plug into a power outlet all the way. If the plug has dust or loose connection, it can cause an electrical shock or fire.	
If the power cable and lead wires have scratches or deteriorated, be sure to replace them. Damaged cable and wires can cause an electrical shock, excessive heat generation or fire.	

Warning	
Do not use a joined power cable or extension cable, or share the same power outlet with other electrical appliances since it can cause an electrical shock, excessive heat generation or fire.	

Caution	
Check to see if the parts and wires are mounted and connected properly, and if the connections at the soldered or crimped terminals are secure. Improper installation and connections can cause excessive heat generation, fire or an electrical shock.	
If the installation platform or frame has corroded, replace it. Corroded installation platform or frame can cause the unit to fall, resulting in injury.	

Check the grounding, and repair it if the equipment is not properly grounded. Improper grounding can cause an electrical shock.	
Be sure to measure the insulation resistance after the repair, and make sure that the resistance is 1 M ohm or higher. Faulty insulation can cause an electrical shock.	
Be sure to check the drainage of the indoor unit after the repair. Faulty drainage can cause the water to enter the room and wet the furniture and floor.	

1.2.4 Using Icons

Icons are used to attract the attention of the reader to specific information. The meaning of each icon is described in the table below:

1.2.5 Using Icons List

Icon	Type of Information	Description
Note	Note	A “note” provides information that is not indispensable, but may nevertheless be valuable to the reader, such as tips and tricks.
Caution	Caution	A “caution” is used when there is danger that the reader, through incorrect manipulation, may damage equipment, loose data, get an unexpected result or has to restart (part of) a procedure.
Warning	Warning	A “warning” is used when there is danger of personal injury.
	Reference	A “reference” guides the reader to other places in this binder or in this manual, where he/she will find additional information on a specific topic.

1.2.6 Embedded wire checking before installation

Check the embedded wire diameter suitable to request:

(Power supply from indoor: 2.5kw ≥1.0mm^2 3.5kw,5kw ≥1.5mm^2 7kw ≥1.0mm^2 ; Power supply from outdoor ≥1.0mm^2)

Check the embedded wire are four roots, L/N/COM/GND; GND is needed, if not, thunder or high voltage wave from power grid will impact to the performance

Using a multi-meter to test short circuit of the four roots wires, make sure no short circuit happen.

2 Specifications

NOMINAL DISTRIBUTION SYSTEM VOLTAGE		
Phase	/	1
Frequency	Hz	50
Voltage	V	230

NOMINAL CAPACITY and NOMINAL INPUT			
		12+12	
		cooling	heating
Capacity rated	KW	5	4.7
	Btu/h	17060(3750-19450)	17740(5460-20810)
Power Consumption(Rated)	KW	1.45	1.4
SEER/SCOP	W/W	6.5	4.0
Annual energy consumption	KWh	269	1645
Moisture Removal	m^3/h	12 single:2×10^{-3}	

TECHNICAL SPECIFICATIONS-UNIT			
Dimensions	H*W*D	mm	553×800×275
Packaged Dimensions	H*W*D	mm	625×954×409
Weight	/	KG	36
Gross weight	/	KG	39
Sound level	Sound peessure	dB	53
	Sound power	dB	63

ELECTRICAL SPECIFICATIONS			
		cooling	heating
Nominal running current	A	6.5	6.3
Maximum running current	A	11.5	12.5
Starting current	A	1.6	2.5

TECHNICAL SPECIFICATIONS-PARTS				
			cooling	heating
Compressor	Type		Rotary Compressor	
	Model		GTD130UKQA8JT6	
	Motor output	W	1350	
	Oil type		RM - LP56EG or equivalent 480 ±20 ml	
	Oil charge volume	L	1.65	
Fan	Type		Axial fan	
	Motor output	W	40	
	Air flow rate(high)	m^3/h	2900	
	Speed(high/low)	rpm	950/650	
Heat exchanger	Type		ML fin-ϕ7HI-HX tube	
	Row*stage*fitch		2*24*1.32	

TECHNICAL SPECIFICATIONS-OTHERS				
Refrigerant circuit	Refrigerant type			R32
	Refrigerant charge		KG	1.4
	Maximum allowable distance between indoor and outdoor		m	30(double) 20(single)
	Maximum allowable level difference		m	15
	Refrigerant control		EEV	
Piping connections (external diameter)		liquid	mm	Φ6.35
		gas	mm	Φ9.52
		drain	mm	Φ16
Heat insulation type			Both liquid and Gas pipes	
Max. piping Length			m	30(double) 20(single)
Max. Level Difference			m	15
Chargeless			m	20
Amount of Additional Charge of Refrigerant			g/m	20

Note: the data are based on the conditions shown in the table below

cooling	heating	Piping length
Indoor: 27℃DB/19℃WB Outdoor: 35℃DB/24℃WB	Indoor:20℃DB Outdoor: 7℃DB/6℃WB	5m

Conversation formulae
Kcal/h= KW×860
Btu/h= KW×3414
cfm=m³/min×35.3

3. Sensors list

type	Description	Qty
Ambient sensor	Its used for detecting temperature of outdoor side	1
Defrosting sensor	Its used for controlling outdoor defrosting at heating mode	
Descharging sensor	Its used for compressor in case of over-heat	
Suction sensor	Its used for detecting suction pipe temperature of compressor to adjust gas flowing	1
Liquid-gas pipe sensor	Its used for adjusting the valve opening of the electric expansion valve.	2

4. Pinping diagrams

Cooling mode

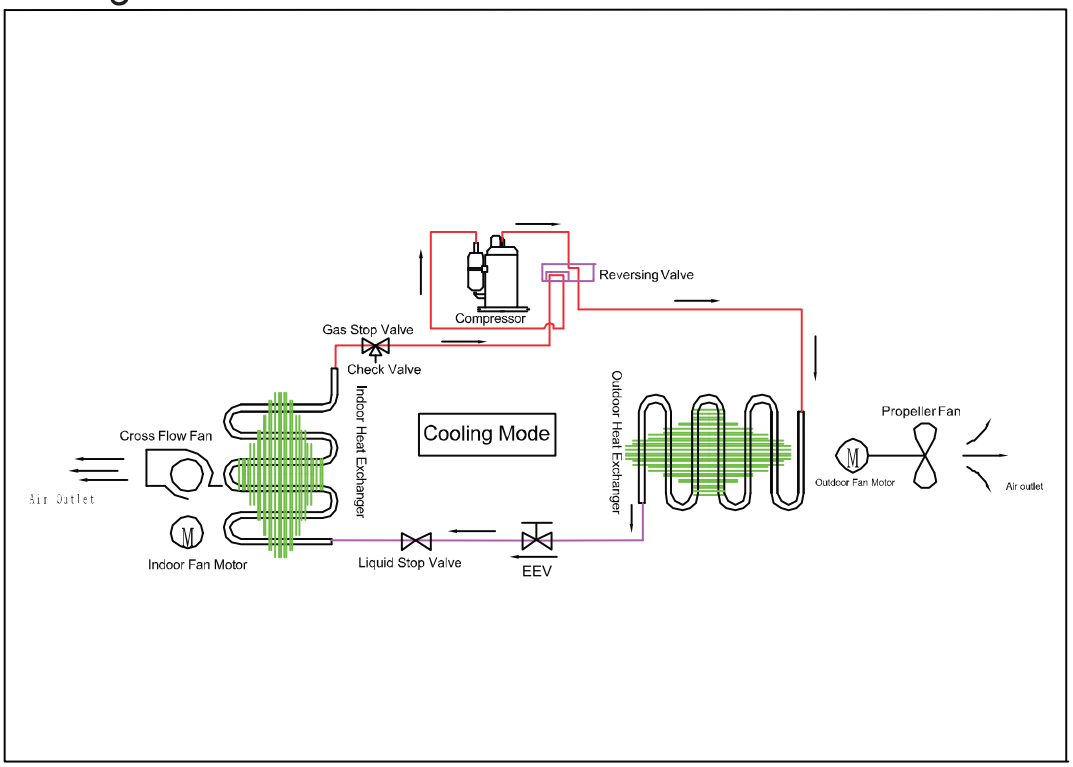

Heating mode

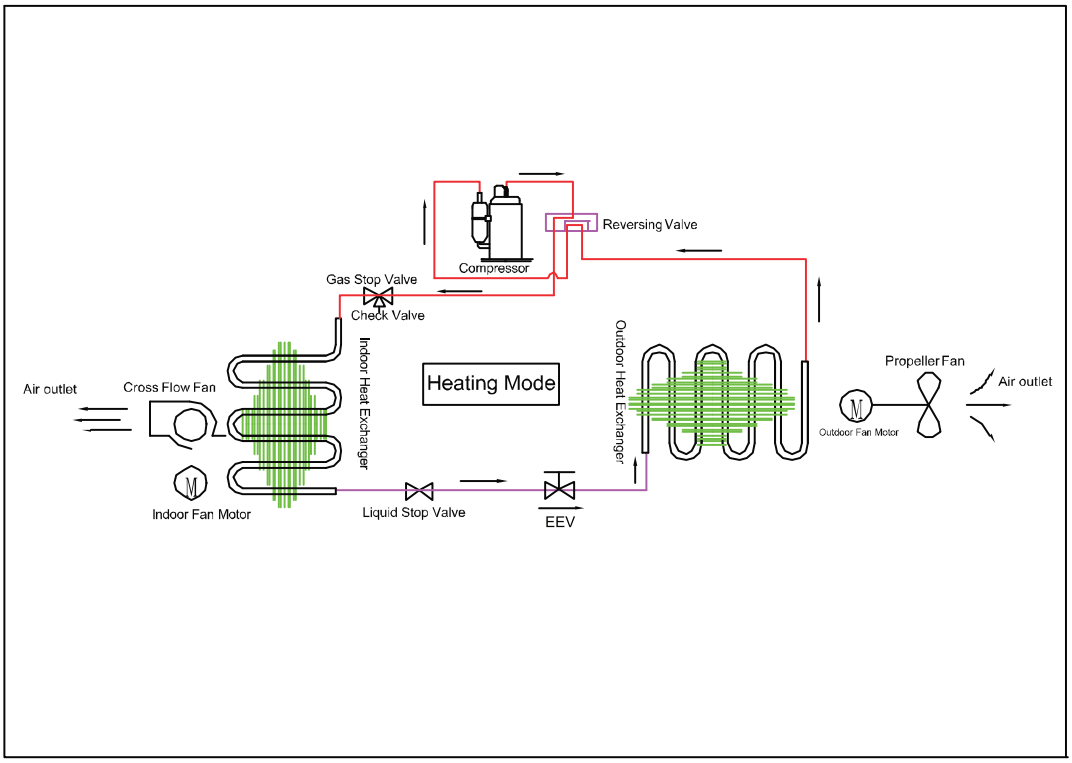

5. Operation range

The name of parts Cooling

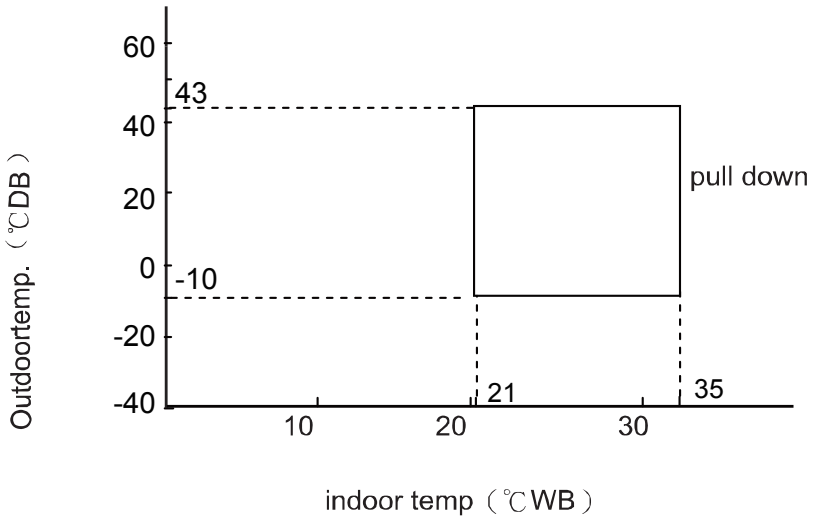

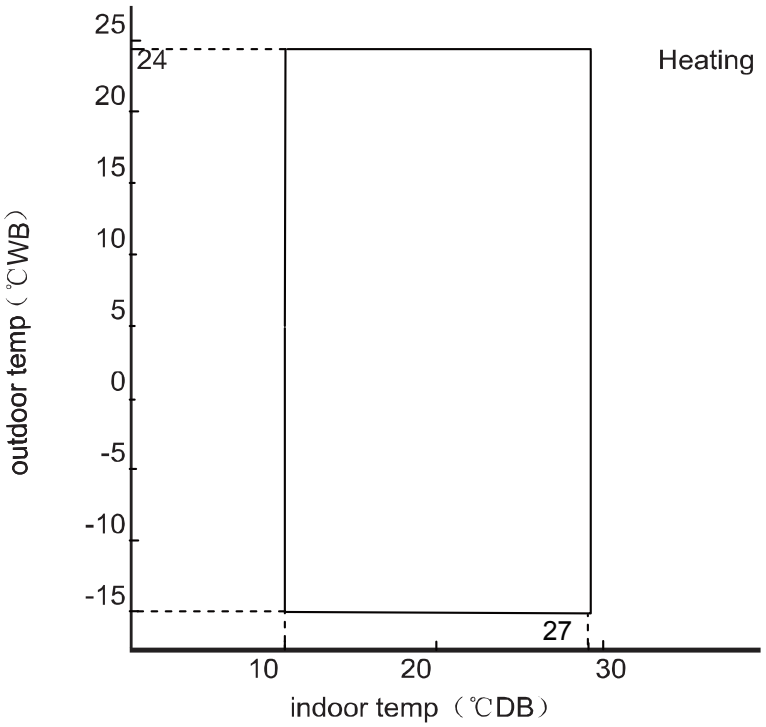

Notes：

The graphs are based on the following condition：

Equivalent piping length	5m
Level difference	0m
Air flow rate	high

6. Printed Circuit Board Connector Wiring Diagram

Connectors

PCB (1) Control PCB

series	PCB connector	Connect with load
1	CN1	Connector for power N and L
2	CN2	
3	CN3	Connector for ground
4	CN9	Connector for CN2,CN1 on the module board
5	CN 8	
6	CN10	Connector for four way valve coil
7	CN17	Connector for electric expansion valves
8	CN16	
9	CN18	Connector for thermistors
10	CN20	
11	CN31	
12	CN25	
13	CN21	Connector for fan motor
14	CN22	Connector for DC POWER 15Vand 5V to the module board
15	CN23	Connector for communicate between the control board and the module board
16	CN24	Connector to N and P of the module board
17	CN26	
18	CN5	Connector for communicate between indoor and outdoor unit

PCB (2) Module PCB

series	PCB connector	Connect with load
1	P (CN8)	Connector for CN26,CN24 on the control board
2	N (CN9)	
3	LO (CN4)	Connector for reactor
4	LI (CN3)	
5	AC_L(CN1)	Connector for CN8,CN9 on the control board
6	AC_N(CN2)	
7	CN5(U)	Connector for the compressor
8	CN6(V)	
9	CN7(W)	
10	CN10	Connector for the DC power 5V and 15V form the control PCB
11	CN11	Connector for communicate between the control board and the module board

Note: Other Designations

PCB(1) (Control PCB)

1) FUSE 1, Fuse (25A,250VAC)

2)LED 1 keep light representative normal ,if keep flash interval representative trouble Alarm

3)RV1,RV2,RV3 Varistor

PCB (1)

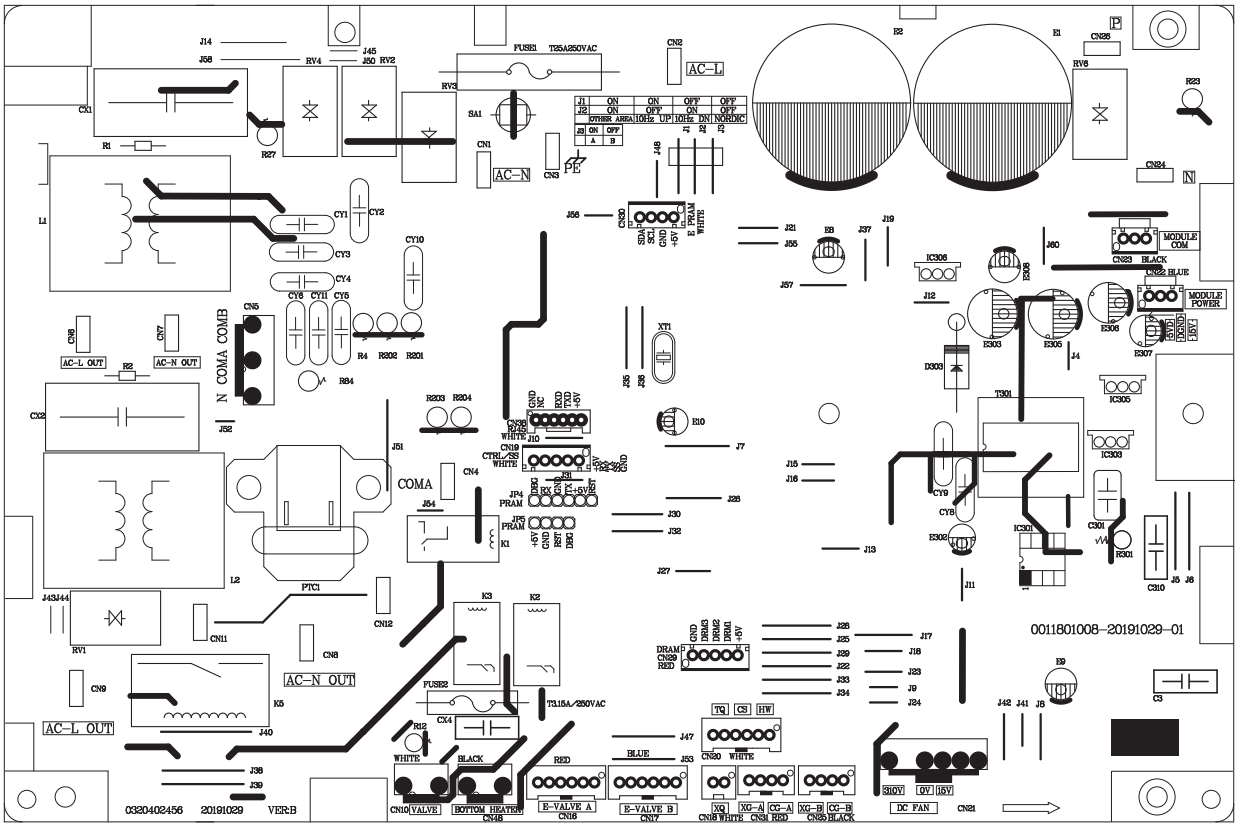
AC-L
AC-N
N COMA COMB
COMA
AC-L OUT
AC-N OUT
MODULE COM
MODULE POWER
0011801008-20191029-01
0320402456 20191029 VER:B
VALVE
BOTTOM HEATER
E-VALVE A
E-VALVE B
DC FAN

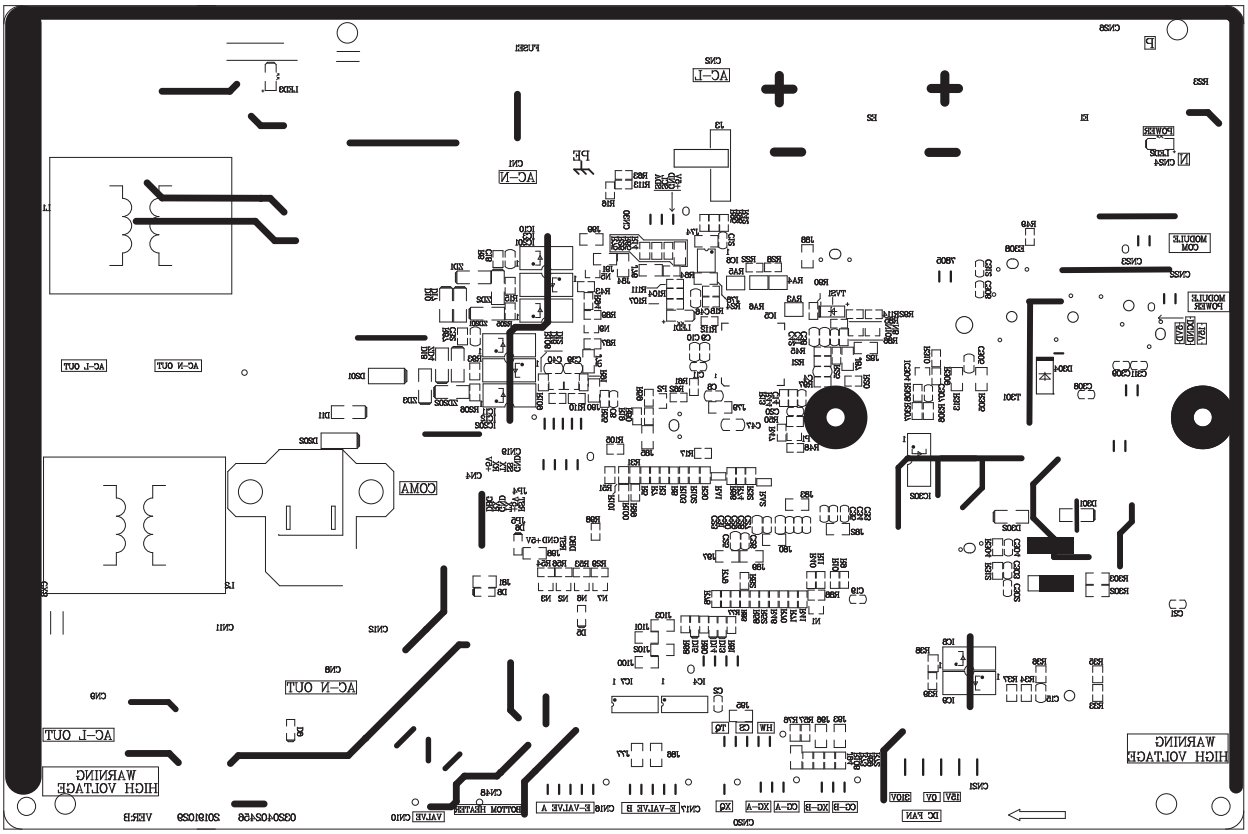

PCB(2)

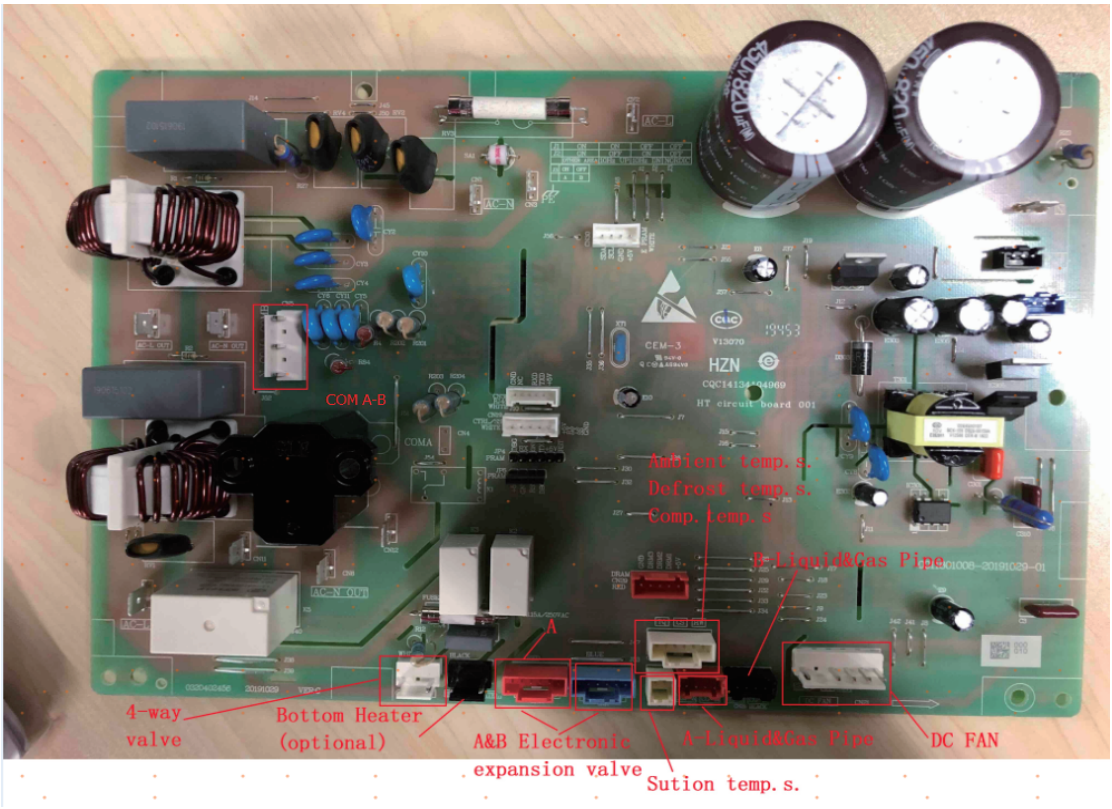
COM A-B
Ambient temp. s.
Defrost temp. s.
Comp. temp. s
B-Liquid&Gas Pipe
A
4-way valve
Bottom Heater (optional)
A&B Electronic expansion valve
A-Liquid&Gas Pipe
DC FAN
Sution temp. s.

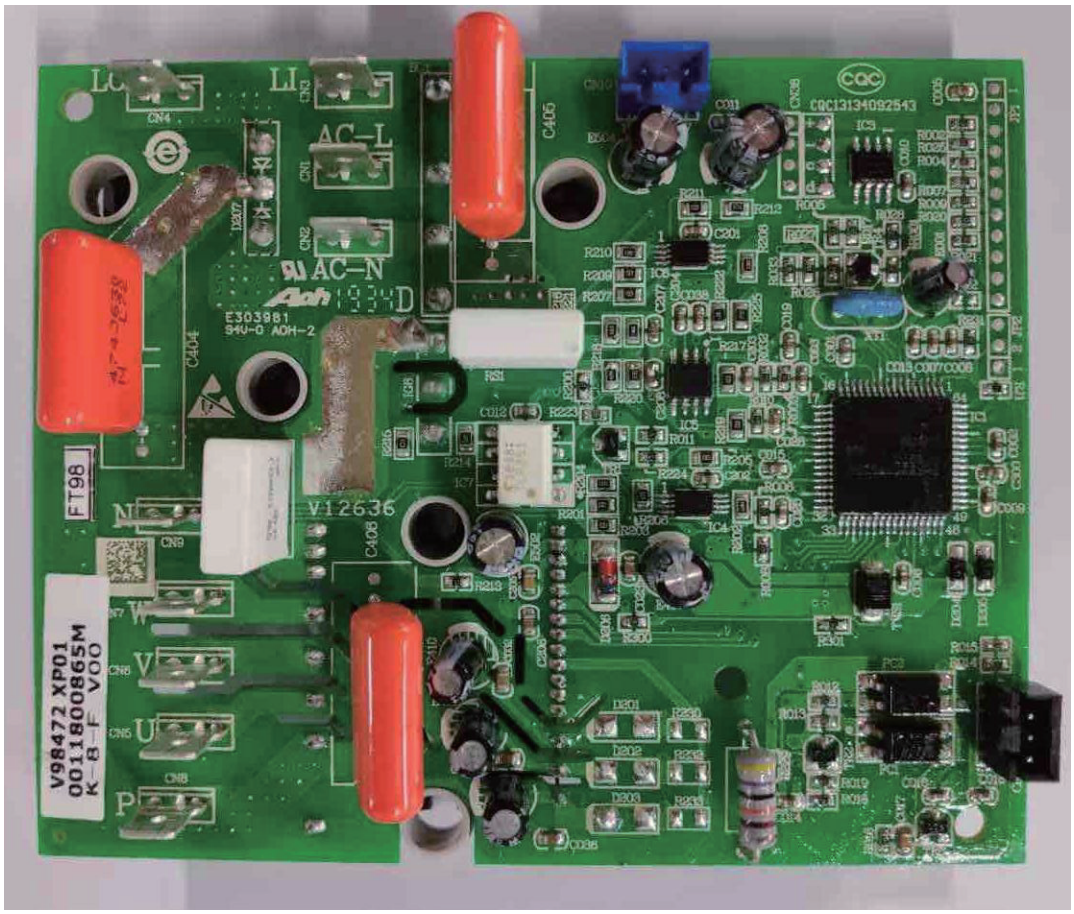

OUTDOOR WIRING DIAGRAM 0011506856

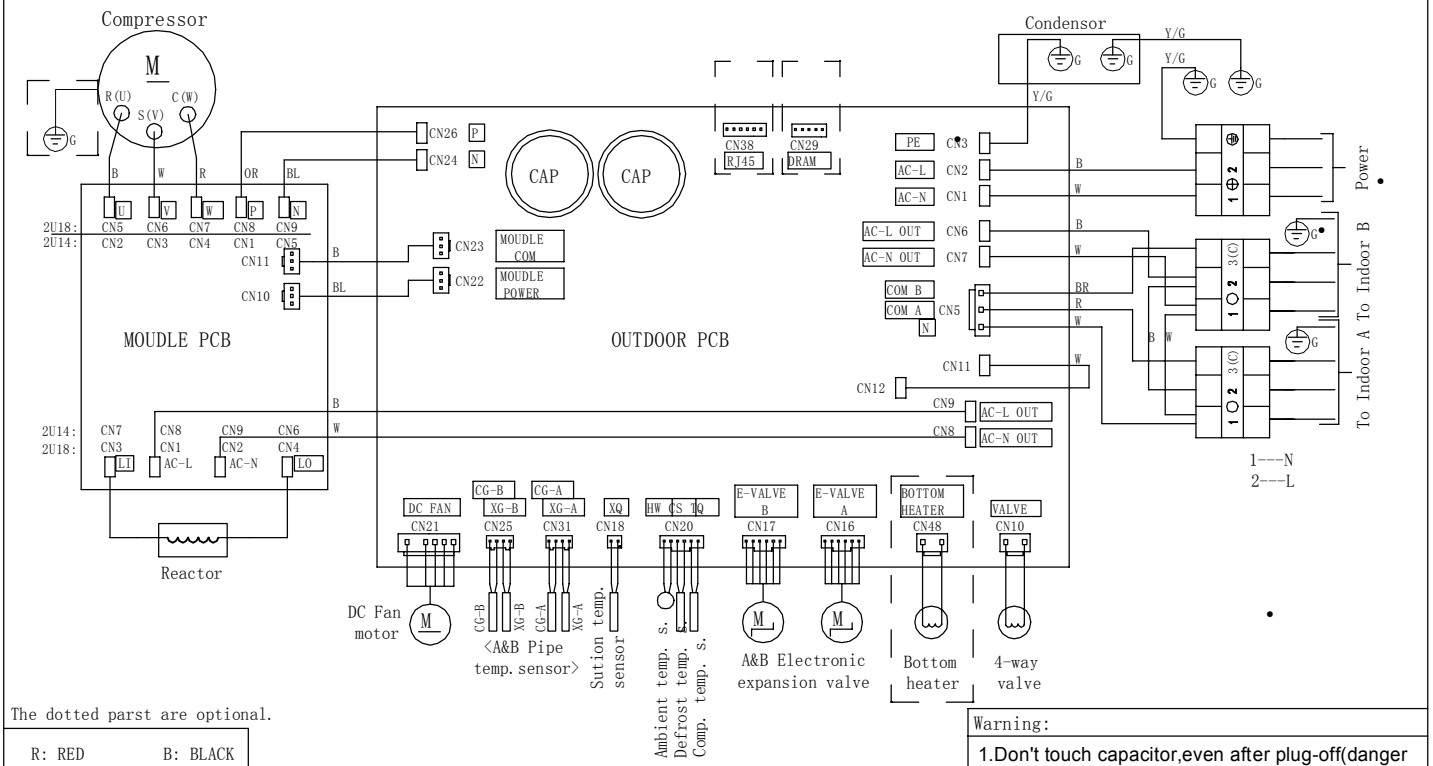

The dotted parst are optional.

R: RED B: BLACK
BL: BLUE GR: GRAY
W: WHITE BR: BROWN
Y/G: YELLOW/GREEN

Warning:

1.Don't touch capacitor,even after plug-off(danger of electric shock).
2.The capacitor retains high voltage even after the plug-off.
3.For your safety,be sure to wait at least 5 minutes.

7.Functions and Control

7.1 The control system of outdoor unit

7.1.1：The operation frequency of outdoor unit and its control

7.1.1.1：The operation frequency control of compressor

The operation frequency scope of compressor：

Mode	Minimun operation frequency	Maximun operation frequency
Heating	30Hz	118Hz
Refrigeration	25 Hz	80Hz

7.1.1.2：The starting of compressor

When the compressor is started for the first time, it must be kept under the conditions of 30Hz,40Hz,58Hz for one minute (the overheating protection of the outdoor unit air-blowing temperature, immediately decrease the frequency when the compressor is overflowing and releasing the pressure)，then it can be operated towards the target frequency. When the machine runs normally, there's no such process. After starting the compressor for operation, the compressor should run according to the calculated frequency, and every determined frequency for protection should be prior to the calculated frequency.

7.1.1.3：The speeds of increasing or decreasing the frequency of the compressor

The speed of increasing or decreasing the frequency rapidly 1 ----------1HZ/second

The speed of increasing or decreasing the frequency slowly 2 ----------1HZ/10seconds

7.1.1.4：The calculation of the compressor's frequency

1)、The minimum/maximum frequency limitation

A. While refrigerating: F－MAX－r is the maximum operation frequency of the compressor; F－MIN－r is the minimum operation frequency of the compressor.

B. While heating: F－MAX－d is the maximum operation frequency of the compressor; F－MIN－d is the minimum operation frequency of the compressor.

1)、The frequency limitation which is affected by the environment temperature.

Heating mode:

Serial No.	Temperature scope	Frequency limitation
1	Wh_c<-12	Max_hz1 118HZ
2	Wh_c<-8	Max_hz2 118HZ
3	Wh_c<-2	Max_hz3 118HZ
4	Wh_c<5	Max_hz4 118HZ
5	Wh_c<10	Max_hz5 118HZ
6	Wh_c<16	Max_hz6 118HZ
7	Wh_c< 20	Max_hz7 112HZ
8	Wh_c> 20	Max_hz8 102HZ

Refrigeration/dehumidification mode::

Serial No.	Temperature scope	Frequency limitation
1	Wh_c<16	Max_hz1 37 HZ
2	Wh_c<23	Max_hz2 45 HZ
3	Wh_c<29	Max_hz3 56 HZ
4	Wh_c<32	Max_hz4 63 HZ
5	Wh_c<40	Max_hz5 90 HZ
6	Wh_c<48	Max_hz4 90 HZ
7	Wh_c>48	Max_hz5 90 HZ

Remarks: the above are not only the maximum frequency limitations of the complete appliance which are affected by the environment, but also the maximum ability limitation of the system. When the starting ability is not the maximum, its maximum frequency limitation is calculated by the following equations:

F（ reference frequency）=∑Fi（ reference frequency）
Note - valid internal machine (starting and running in accordance with the state) to participate in the calculation

*Fi（ reference frequency）＝Fei（Computed base frequency）*Kw*
*（Outer ring temperature coefficient（External ring temperature on frequency limitation section））*Pi（Temperature difference between the weight） *Ki（Wind speed weight）*

（Note: the reference frequency Fi is rounded after calculation and no rounding is performed；）

i= machine A, machine B...

Refrigeration/dehumidification:

Pi	< 0	<1	< 2	< 3	< 4	≥ 4
The percentage of the rated frequency P	80%	85%	90%	95 %	100%	110%

Heating mode：

Pi	< 0	<1	< 2	< 3	< 4	≥ 4
The percentage of the rated frequency P	80%	85%	90%	98%	105%	115%

The indoor set airflow speed	Breeze	Low	Medium	High	Strong	Quiet	Healthy airflow
Ki	60%	70%	85%	100%	108%	60%	60%

When the outdoor unit is shut down, the valve is opened completely for 2 minutes, and then begin initialization.

The scope of refrigerationg valve 90-----480 steps

The scope of heating valve 70-----480 steps

The valves are adjusted according to the degree of superheat —SHa，△SHa.

7.1.2： Four way control

For the details of defrosting four-way valve control, see the defrosting process.

Four way working in other ways:

Under the mode of heating, open the four-way valve, when the compressor is not started or changed to non-heating mode, make sure the compressor is stoped for 2 minutes, and then close the four-way valve.

7.1.3 Protection function

7.1.3.1： TTC high temperature-preventing protection

Once the machine is started, it can run TTC overheating protection of air-blowing, but air-blowing sensor malfunction must alarm after 10minutes during which the compressor is started (during the course of self-detection, there's no such limitation)

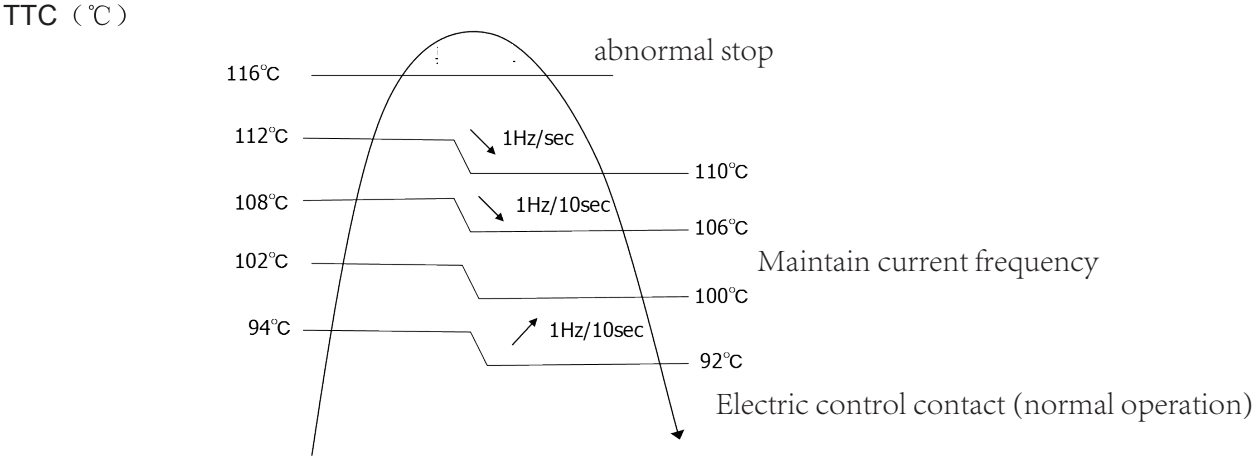

TTC>=116℃ lasts for 20 seconds. Overheating protection of air-blowing, compressor stops for more than 3 minutes

TTC< 92℃ Compressor start to restore normal control

If there are three failures in three minutes, alarm malfunction to the indoor, others don't last.

7.1.3.2： TC high temperature-preventing control of the indoor heating unit：

Tpg_indoor is the highest value of the effective indoor unit (start it and it is in accord with the running state).

The indoor heat exchanger sensor tests the temperature of the indoor heat exchanger. If the temperature is higher than 54℃, decrease the rotate speed of the compressor and do the high temperature-preventing protection of the indoor heat exchanger; if the temperature of the indoor heat exchanger is lower than 44℃, recover to the normal control.

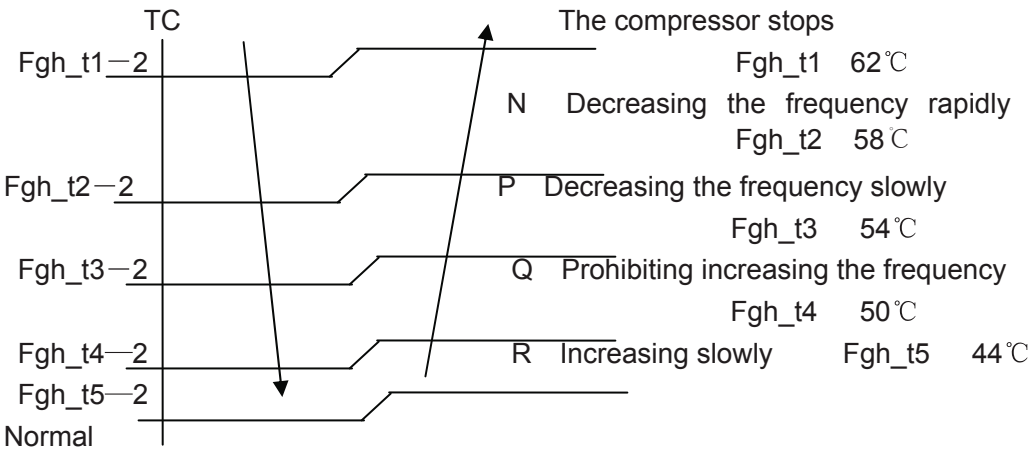

N：Decreasing at the speed of 1HZ/1 second

P：Decreasing at the speed of 1Hz/10 seconds

Q：Continue to keep the last-time instruction cycle

R：Increasing at the speed of 1Hz/10seconds

Remarks: the outdoor unit

7.1.3.3 The control of preventing the overcurrent of the compressor ：

●During the starting process of the compressor, if the curren of the compressor is greater than 14A for 3 seconds, stop the compressor and alarm, after 3 minutes, start it again.

●During the starting process of the compressor, if the AC current is greater than 13A, the frequency of the compressor decreases at the speed of 1HZ/second.

●During the starting process of the compressor, if the AC current is greater than 12A, the frequency of the compressor decreases at the speed of 0.1HZ/second.

●During the starting process of the compressor, if the AC current is greater than 11A,the frequency of the compressor increases at the prohibited speed.

●During the starting process of the compressor, if the AC current is greater than 10A,the frequency of the compressor increases at the speed of no faster than 0.1HZ/second.

7.1.3.4 The protection function of AC current:

During the starting process of the compressor, if the AC current is greater than 14A, the frequency of the compressor decreases at the speed of 1HZ/second.

During the starting process of the compressor, if the AC current is greater than 13A, the frequency of the compressor decreases at the speed of 0.1HZ/second.

During the starting process of the compressor, if the AC current is greater than 12A, the frequency of the compressor increases at the prohibited speed.

During the starting process of the compressor, if the AC current is greater than 11A, the frequency of the compressor increases at the speed of no faster than 0.1HZ/second.

Remarks: when the outdoor temperature is high, there's compensation for AC current protection.

⑴When the outdoor environment temperature is higher than 40℃, AC current protection value decreases by 5A

⑵When the outdoor environment temperature is higher than 50℃,AC current protection value decreases by 6A

7.1.3.5 Antifreezing protection of the indoor heat exchanger

When refrigerating/heating, prevent freezing.

Tpg_indoor is the minimum value of the effective indoor unit (start it and it is in accord with the running state).

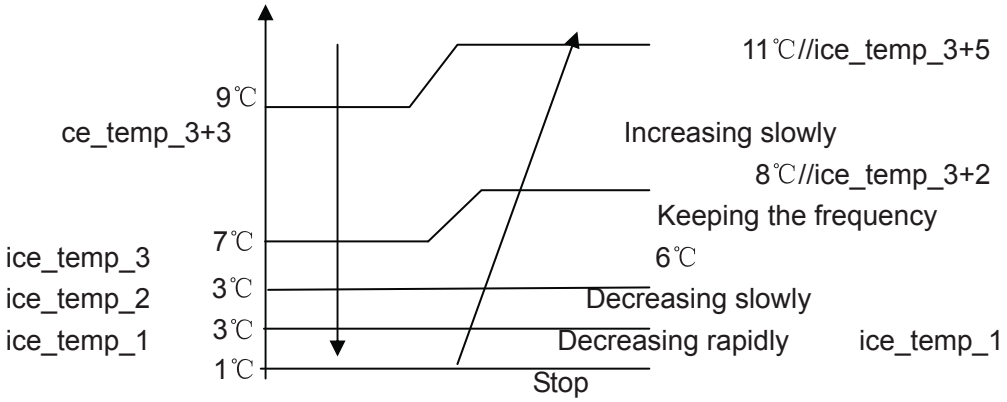

When Tpg_indoor 〈 ice_temp_1℃, the frequency of the compressor decreases at the speed of 1HZ/1second.

When Tpg_indoor 〈 ice_temp_2℃, the frequency of the compressor decreases at the speed of 1HZ/10seconds.

When Tpg_indoor begins to rise again, and ice_temp_2 〈=Tpg_indoor 〈= ice_temp_3℃, the frequency of thecompressor doesn't change.

When ice_temp_3 〈Tpg_indoor 〈ice_temp_3+3℃, the frequency of the compressor increases at the speed of 1HZ/10seconds.

For example, Tpg_indoor<= 0℃，last for 2 minutes, and then the outdoor unit will stop, and report underload malfunction, but don't send malfunction report to the indoor.

The compressor stops for more than 3 minutes, Tpg_indoor> ice_temp_3+2℃, the compressor recovers.

7.1.3.6 Temperature protection of the outdoor refrigerating coil

When the defrosting temperature and the sensor's temperature are higher than 64℃, the frequency of the compressor decreases 1hz/10seconds.

When the temperatures are lower than 64℃ and higher than 60℃, keep the frequency of the compressor. When the temperatures are higher than 70℃, relieve the defrosting temperature protection.

7.1.4 The outdoor fan control (exchange fan)

When the fan is changed among every airflow speed (including stop blowing), in order to avoid the airflow speed from skipping frequently, it must be kept under each mode for over 30 seconds.

7.1.4.1 The outdoor fan control when refrigerating or dehumidifying

After the compressor is started for 5 seconds, In 3 minutes, the outdoor fan is started according to the temperature conditions of the outdoor environment.

Twh（℃）	Twh <23℃	23℃<Twh<29℃	Twh≥29℃
Cooling\Dry	500	650	800

After 3 minutes,The wind speed control is related to the frequency of the compressor and the temperature conditions of the outdoor environment.

when cooling compressor frequency (Hz) / Twh（℃）	<40	40~60	≥60
≤23	500	600	700
23-29	600	700	850
29~40	850	900	900
≥40	900		

7.1.4.2 The outdoor fan control when heating

After the compressor is started for 5 seconds, In 3 minutes, the outdoor fan is started according to the temperature conditions of the outdoor environment.

Twh（℃）	Twh <10℃	10℃< Twh <16℃	Twh≥16℃
Heating	850	650	400

After 3 minutes,The wind speed control is related to the frequency of the compressor and the temperature conditions of the outdoor environment.

when heaating compressor frequency (Hz) / Twh（℃）	<60	60~90	≥90
≤10	800	900	900
10-16	700	800	850
≥16	700		

7.1.5 The control of the outdoor electronic expansion valve

When starting the compressor: the opening size of the valve must be guaranteed to have entered into the standard opening size, and then the compressor can be started.
When refrigeration is in vain (the machine is shut down or is in the state of retrograde operation), the opening size of the expansion valve of the indoor unit is 5 steps;
When heating is in vain, the opening size of the expansion valve of the indoor unit is 80 steps;

7.2 Value of thermistor

outdoor Unit

Ambient Sensor, Defrosting Sensor, Pipe sensor

R25℃=10KΩ ±3% B25℃/50℃=3700K±3%

Temp.(℃)	Max.(KΩ)	Normal(KΩ)	Min.(KΩ)	Tolerance(℃)	
-30	165.2170	147.9497	132.3678	-1.94	1.75
-29	155.5754	139.5600	125.0806	-1.93	1.74
-28	146.5609	131.7022	118.2434	-1.91	1.73
-27	138.1285	124.3392	111.8256	-1.89	1.71
-26	130.2371	117.4366	105.7989	-1.87	1.70
-25	122.8484	110.9627	100.1367	-1.85	1.69
-24	115.9272	104.8882	94.8149	-1.83	1.67
-23	109.4410	99.1858	89.8106	-1.81	1.66
-22	103.3598	93.8305	85.1031	-1.80	1.64
-21	97.6556	88.7989	80.6728	-1.78	1.63
-20	92.3028	84.0695	76.5017	-1.76	1.62
-19	87.2775	79.6222	72.5729	-1.74	1.60
-18	82.5577	75.4384	68.8710	-1.72	1.59
-17	78.1230	71.5010	65.3815	-1.70	1.57
-16	73.9543	67.7939	62.0907	-1.68	1.55
-15	70.0342	64.3023	58.9863	-1.66	1.54
-14	66.3463	61.0123	56.0565	-1.64	1.52
-13	62.8755	57.9110	53.2905	-1.62	1.51
-12	59.6076	54.9866	50.6781	-1.60	1.49
-11	56.5296	52.2278	48.2099	-1.58	1.47
-10	53.6294	49.6244	45.8771	-1.56	1.46
-9	50.8956	47.1666	43.6714	-1.54	1.44
-8	48.3178	44.8454	41.5851	-1.51	1.42
-7	45.8860	42.6525	39.6112	-1.49	1.40
-6	43.5912	40.5800	37.7429	-1.47	1.39
-5	41.4249	38.6207	35.9739	-1.45	1.37
-4	39.3792	36.7676	34.2983	-1.43	1.35

-3	37.4465	35.0144	32.7108	-1.41	1.33
-2	35.6202	33.3552	31.2062	-1.38	1.31
-1	33.8936	31.7844	29.7796	-1.36	1.29
0	32.2608	30.2968	28.4267	-1.34	1.28
1	30.7162	28.8875	27.1431	-1.32	1.26
2	29.2545	27.5519	25.9250	-1.29	1.24
3	27.8708	26.2858	24.7686	-1.27	1.22
4	26.5605	25.0851	23.6704	-1.25	1.20
5	25.3193	23.9462	22.6273	-1.23	1.18
6	24.1432	22.8656	21.6361	-1.20	1.16
7	23.0284	21.8398	20.6939	-1.18	1.14
8	21.9714	20.8659	19.7982	-1.15	1.12
9	20.9688	19.9409	18.9463	-1.13	1.09
10	20.0176	19.0621	18.1358	-1.11	1.07
11	19.1149	18.2270	17.3646	-1.08	1.05
12	18.2580	17.4331	16.6305	-1.06	1.03
13	17.4442	16.6782	15.9315	-1.03	1.01
14	16.6711	15.9601	15.2657	-1.01	0.99
15	15.9366	15.2770	14.6315	-0.98	0.96
16	15.2385	14.6268	14.0271	-0.96	0.94
17	14.5748	14.0079	13.4510	-0.93	0.92
18	13.9436	13.4185	12.9017	-0.91	0.90
19	13.3431	12.8572	12.3778	-0.88	0.87
20	12.7718	12.3223	11.8780	-0.86	0.85
21	12.2280	11.8126	11.4011	-0.83	0.83
22	11.7102	11.3267	10.9459	-0.81	0.80
23	11.2172	10.8634	10.5114	-0.78	0.78
24	10.7475	10.4216	10.0964	-0.75	0.75
25	10.3000	10.0000	9.7000	-0.75	0.75
26	9.8975	9.5974	9.2980	-0.76	0.76
27	9.5129	9.2132	8.9148	-0.80	0.80
28	9.1454	8.8465	8.5496	-0.84	0.83
29	8.7942	8.4964	8.2013	-0.87	0.86
30	8.4583	8.1621	7.8691	-0.91	0.90
31	8.1371	7.8428	7.5522	-0.95	0.93
32	7.8299	7.5377	7.2498	-0.98	0.97
33	7.5359	7.2461	6.9611	-1.02	1.00
34	7.2546	6.9673	6.6854	-1.06	1.04
35	6.9852	6.7008	6.4222	-1.10	1.07
36	6.7273	6.4459	6.1707	-1.13	1.11
37	6.4803	6.2021	5.9304	-1.17	1.14
38	6.2437	5.9687	5.7007	-1.21	1.18
39	6.0170	5.7454	5.4812	-1.25	1.22
40	5.7997	5.5316	5.2712	-1.29	1.25
41	5.5914	5.3269	5.0704	-1.33	1.29

42	5.3916	5.1308	4.8783	-1.37	1.33
43	5.2001	4.9430	4.6944	-1.41	1.36
44	5.0163	4.7630	4.5185	-1.45	1.40
45	4.8400	4.5905	4.3500	-1.49	1.44
46	4.6708	4.4252	4.1887	-1.53	1.47
47	4.5083	4.2666	4.0342	-1.57	1.51
48	4.3524	4.1145	3.8862	-1.61	1.55
49	4.2026	3.9686	3.7443	-1.65	1.59
50	4.0588	3.8287	3.6084	-1.70	1.62
51	3.9206	3.6943	3.4780	-1.74	1.66
52	3.7878	3.5654	3.3531	-1.78	1.70
53	3.6601	3.4416	3.2332	-1.82	1.74
54	3.5374	3.3227	3.1183	-1.87	1.78
55	3.4195	3.2085	3.0079	-1.91	1.82
56	3.3060	3.0989	2.9021	-1.95	1.85
57	3.1969	2.9935	2.8005	-2.00	1.89
58	3.0919	2.8922	2.7029	-2.04	1.93
59	2.9909	2.7948	2.6092	-2.08	1.97
60	2.8936	2.7012	2.5193	-2.13	2.01
61	2.8000	2.6112	2.4328	-2.17	2.05
62	2.7099	2.5246	2.3498	-2.22	2.09
63	2.6232	2.4413	2.2700	-2.26	2.13
64	2.5396	2.3611	2.1932	-2.31	2.17
65	2.4591	2.2840	2.1195	-2.36	2.21
66	2.3815	2.2098	2.0486	-2.40	2.25
67	2.3068	2.1383	1.9803	-2.45	2.29
68	2.2347	2.0695	1.9147	-2.49	2.34
69	2.1652	2.0032	1.8516	-2.54	2.38
70	2.0983	1.9393	1.7908	-2.59	2.42
71	2.0337	1.8778	1.7324	-2.63	2.46
72	1.9714	1.8186	1.6761	-2.68	2.50
73	1.9113	1.7614	1.6219	-2.73	2.54
74	1.8533	1.7064	1.5697	-2.78	2.58
75	1.7974	1.6533	1.5194	-2.83	2.63
76	1.7434	1.6021	1.4710	-2.88	2.67
77	1.6913	1.5528	1.4243	-2.92	2.71
78	1.6409	1.5051	1.3794	-2.97	2.75
79	1.5923	1.4592	1.3360	-3.02	2.80
80	1.5454	1.4149	1.2942	-3.07	2.84
81	1.5000	1.3721	1.2540	-3.12	2.88
82	1.4562	1.3308	1.2151	-3.17	2.93
83	1.4139	1.2910	1.1776	-3.22	2.97
84	1.3730	1.2525	1.1415	-3.27	3.01
85	1.3335	1.2153	1.1066	-3.32	3.06
86	1.2953	1.1794	1.0730	-3.38	3.10

87	1.2583	1.1448	1.0405	-3.43	3.15
88	1.2226	1.1113	1.0092	-3.48	3.19
89	1.1880	1.0789	0.9789	-3.53	3.24
90	1.1546	1.0476	0.9497	-3.58	3.28
91	1.1223	1.0174	0.9215	-3.64	3.33
92	1.0910	0.9882	0.8942	-3.69	3.37
93	1.0607	0.9599	0.8679	-3.74	3.42
94	1.0314	0.9326	0.8424	-3.80	3.46
95	1.0030	0.9061	0.8179	-3.85	3.51
96	0.9756	0.8806	0.7941	-3.90	3.55
97	0.9490	0.8558	0.7711	-3.96	3.60
98	0.9232	0.8319	0.7489	-4.01	3.64
99	0.8983	0.8088	0.7275	-4.07	3.69
100	0.8741	0.7863	0.7067	-4.12	3.74
101	0.8507	0.7646	0.6867	-4.18	3.78
102	0.8281	0.7436	0.6672	-4.23	3.83
103	0.8061	0.7233	0.6484	-4.29	3.88
104	0.7848	0.7036	0.6303	-4.34	3.92
105	0.7641	0.6845	0.6127	-4.40	3.97
106	0.7441	0.6661	0.5957	-4.46	4.02
107	0.7247	0.6482	0.5792	-4.51	4.07
108	0.7059	0.6308	0.5632	-4.57	4.12
109	0.6877	0.6140	0.5478	-4.63	4.16
110	0.6700	0.5977	0.5328	-4.69	4.21
111	0.6528	0.5820	0.5183	-4.74	4.26
112	0.6361	0.5667	0.5043	-4.80	4.31
113	0.6200	0.5518	0.4907	-4.86	4.36
114	0.6043	0.5374	0.4775	-4.92	4.41
115	0.5891	0.5235	0.4648	-4.98	4.45
116	0.5743	0.5100	0.4524	-5.04	4.50
117	0.5600	0.4968	0.4404	-5.10	4.55
118	0.5460	0.4841	0.4288	-5.16	4.60
119	0.5325	0.4717	0.4175	-5.22	4.65
120	0.5194	0.4597	0.4066	-5.28	4.70

Discharging Sensor

R80℃=50KΩ ±3%

B25/80℃=4450K±3%

Temp.((℃))	Max.(KΩ)	Normal(KΩ)	Min.(KΩ)	Tolerance(℃)	
-30	14646.0505	12061.7438	9924.4999	-2.96	2.45
-29	13654.1707	11267.8730	9290.2526	-2.95	2.44
-28	12735.8378	10531.3695	8700.6388	-2.93	2.44
-27	11885.1336	9847.7240	8152.2338	-2.92	2.43
-26	11096.6531	9212.8101	7641.8972	-2.91	2.42
-25	10365.4565	8622.8491	7166.7474	-2.90	2.42

-24	9687.0270	8074.3787	6724.1389	-2.88	2.41
-23	9057.2314	7564.2244	6311.6413	-2.87	2.41
-22	8472.2852	7089.4741	5927.0206	-2.86	2.40
-21	7928.7217	6647.4547	5568.2222	-2.84	2.39
-20	7423.3626	6235.7109	5233.3554	-2.83	2.39
-19	6953.2930	5851.9864	4920.6791	-2.82	2.38
-18	6515.8375	5494.2064	4628.5894	-2.80	2.37
-17	6108.5393	5160.4621	4355.6078	-2.79	2.37
-16	5729.1413	4848.9963	4100.3708	-2.77	2.36
-15	5375.5683	4558.1906	3861.6201	-2.76	2.35
-14	5045.9114	4286.5535	3638.1938	-2.75	2.34
-13	4738.4141	4032.7098	3429.0191	-2.73	2.34
-12	4451.4586	3795.3910	3233.1039	-2.72	2.33
-11	4183.5548	3573.4260	3049.5312	-2.70	2.32
-10	3933.3289	3365.7336	2877.4527	-2.69	2.31
-9	3699.5139	3171.3148	2716.0828	-2.67	2.30
-8	3480.9407	2989.2460	2564.6945	-2.66	2.29
-7	3276.5302	2818.6731	2422.6139	-2.64	2.28
-6	3085.2854	2658.8058	2289.2164	-2.63	2.28
-5	2906.2851	2508.9126	2163.9230	-2.61	2.27
-4	2738.6777	2368.3158	2046.1961	-2.60	2.26
-3	2581.6752	2236.3876	1935.5371	-2.58	2.25
-2	2434.5487	2112.5459	1831.4826	-2.56	2.24
-1	2296.6230	1996.2509	1733.6024	-2.55	2.23
0	2167.2730	1887.0018	1641.4966	-2.53	2.22
1	2045.9191	1784.3336	1554.7931	-2.52	2.21
2	1932.0242	1687.8144	1473.1460	-2.50	2.20
3	1825.0899	1597.0431	1396.2333	-2.48	2.19
4	1724.6540	1511.6468	1323.7551	-2.47	2.17
5	1630.2870	1431.2787	1255.4324	-2.45	2.16
6	1541.5904	1355.6163	1191.0048	-2.43	2.15
7	1458.1938	1284.3593	1130.2298	-2.41	2.14
8	1379.7528	1217.2282	1072.8813	-2.40	2.13
9	1305.9472	1153.9626	1018.7481	-2.38	2.12
10	1236.4792	1094.3200	967.6334	-2.36	2.11
11	1171.0715	1038.0743	919.3533	-2.35	2.09
12	1109.4661	985.0146	873.7359	-2.33	2.08
13	1051.4226	934.9440	830.6210	-2.31	2.07
14	996.7169	887.6792	789.8583	-2.29	2.06
15	945.1404	843.0486	751.3077	-2.27	2.04
16	896.4981	800.8922	714.8380	-2.26	2.03
17	850.6086	761.0603	680.3265	-2.24	2.02
18	807.3024	723.4134	647.6580	-2.22	2.00
19	766.4212	687.8205	616.7252	-2.20	1.99
20	727.8172	654.1596	587.4271	-2.18	1.98

21	691.3524	622.3161	559.6694	-2.16	1.96
22	656.8979	592.1831	533.3634	-2.14	1.95
23	624.3328	563.6604	508.4261	-2.12	1.93
24	593.5446	536.6540	484.7796	-2.10	1.92
25	564.4275	511.0760	462.3510	-2.09	1.90
26	536.9865	486.9352	441.1516	-2.07	1.89
27	511.0105	464.0500	421.0258	-2.05	1.87
28	486.4151	442.3499	401.9146	-2.03	1.86
29	463.1208	421.7683	383.7626	-2.01	1.84
30	441.0535	402.2430	366.5175	-1.99	1.83
31	420.1431	383.7151	350.1301	-1.97	1.81
32	400.3242	366.1295	334.5542	-1.95	1.80
33	381.5350	349.4341	319.7460	-1.93	1.78
34	363.7176	333.5801	305.6645	-1.90	1.76
35	346.8176	318.5216	292.2709	-1.88	1.75
36	330.7839	304.2151	279.5286	-1.86	1.73
37	315.5682	290.6199	267.4031	-1.84	1.71
38	301.1254	277.6976	255.8620	-1.82	1.70
39	287.4128	265.4119	244.8745	-1.80	1.68
40	274.3905	253.7288	234.4118	-1.78	1.66
41	262.0206	242.6161	224.4465	-1.76	1.64
42	250.2676	232.0436	214.9529	-1.74	1.63
43	239.0983	221.9825	205.9065	-1.71	1.61
44	228.4809	212.4060	197.2844	-1.69	1.59
45	218.3860	203.2887	189.0648	-1.67	1.57
46	208.7855	194.6066	181.2273	-1.65	1.55
47	199.6531	186.3369	173.7524	-1.63	1.54
48	190.9639	178.4584	166.6217	-1.60	1.52
49	182.6945	170.9508	159.8181	-1.58	1.50
50	174.8228	163.7951	153.3249	-1.56	1.48
51	167.3280	156.9733	147.1268	-1.53	1.46
52	160.1904	150.4683	141.2090	-1.51	1.44
53	153.3914	144.2641	135.5577	-1.49	1.42
54	146.9136	138.3454	130.1598	-1.47	1.40
55	140.7403	132.6980	125.0027	-1.44	1.38
56	134.8559	127.3081	120.0746	-1.42	1.36
57	129.2457	122.1630	115.3645	-1.40	1.34
58	123.8956	117.2504	110.8618	-1.37	1.32
59	118.7926	112.5589	106.5564	-1.35	1.30
60	113.9241	108.0776	102.4388	-1.32	1.28
61	109.2784	103.7961	98.5000	-1.30	1.26
62	104.8443	99.7046	94.7315	-1.28	1.23
63	100.6112	95.7939	91.1253	-1.25	1.21
64	96.5692	92.0553	87.6735	-1.23	1.19
65	92.7088	88.4805	84.3690	-1.20	1.17

66	89.0211	85.0614	81.2048	-1.18	1.15
67	85.4976	81.7908	78.1744	-1.15	1.12
68	82.1303	78.6615	75.2715	-1.13	1.10
69	78.9116	75.6668	72.4902	-1.10	1.08
70	75.8343	72.8004	69.8249	-1.08	1.06
71	72.8916	70.0561	67.2703	-1.05	1.03
72	70.0770	67.4283	64.8213	-1.03	1.01
73	67.3844	64.9115	62.4731	-1.00	0.99
74	64.8080	62.5006	60.2211	-0.98	0.96
75	62.3423	60.1906	58.0609	-0.95	0.94
76	59.9821	57.9770	55.9885	-0.92	0.92
77	57.7223	55.8552	53.9998	-0.90	0.89
78	55.5583	53.8210	52.0912	-0.87	0.87
79	53.4856	51.8706	50.2591	-0.85	0.84
80	51.5000	50.0000	48.5000	-0.85	0.84
81	49.7063	48.2057	46.7083	-0.85	0.85
82	47.9835	46.4842	44.9911	-0.89	0.89
83	46.3286	44.8323	43.3452	-0.93	0.92
84	44.7385	43.2468	41.7672	-0.96	0.95
85	43.2105	41.7248	40.2540	-1.00	0.99
86	41.7386	40.2604	38.7996	-1.03	1.02
87	40.3241	38.8545	37.4048	-1.07	1.06
88	38.9643	37.5045	36.0668	-1.11	1.09
89	37.6569	36.2078	34.7831	-1.14	1.13
90	36.3996	34.9622	33.5513	-1.18	1.16
91	35.1903	33.7653	32.3689	-1.22	1.19
92	34.0269	32.6151	31.2338	-1.26	1.23
93	32.9075	31.5096	30.1438	-1.30	1.27
94	31.8302	30.4467	29.0970	-1.33	1.30
95	30.7933	29.4246	28.0915	-1.37	1.34
96	29.7950	28.4417	27.1254	-1.41	1.37
97	28.8337	27.4961	26.1970	-1.45	1.41
98	27.9078	26.5864	25.3048	-1.49	1.44
99	27.0160	25.7110	24.4470	-1.53	1.48
100	26.1569	24.8685	23.6222	-1.57	1.52
101	25.3290	24.0574	22.8291	-1.61	1.55
102	24.5311	23.2765	22.0662	-1.65	1.59
103	23.7620	22.5245	21.3323	-1.69	1.63
104	23.0205	21.8002	20.6261	-1.73	1.66
105	22.3055	21.1025	19.9465	-1.77	1.70
106	21.6159	20.4303	19.2924	-1.81	1.74
107	20.9508	19.7825	18.6626	-1.85	1.77
108	20.3091	19.1582	18.0563	-1.89	1.81
109	19.6899	18.5564	17.4723	-1.93	1.85
110	19.0924	17.9761	16.9098	-1.98	1.89

111	18.5157	17.4166	16.3680	-2.02	1.93
112	17.9590	16.8769	15.8458	-2.06	1.96
113	17.4214	16.3564	15.3427	-2.10	2.00
114	16.9023	15.8542	14.8577	-2.15	2.04
115	16.4010	15.3696	14.3902	-2.19	2.08
116	15.9167	14.9020	13.9394	-2.23	2.12
117	15.4489	14.4506	13.5047	-2.27	2.16
118	14.9968	14.0149	13.0855	-2.32	2.19
119	14.5599	13.5942	12.6811	-2.36	2.23
120	14.1376	13.1879	12.2909	-2.41	2.27
121	13.7294	12.7955	11.9144	-2.45	2.31
122	13.3347	12.4165	11.5510	-2.50	2.35
123	12.9531	12.0503	11.2003	-2.54	2.39
124	12.5840	11.6965	10.8617	-2.58	2.43
125	12.2270	11.3545	10.5348	-2.63	2.47
126	11.8817	11.0240	10.2191	-2.68	2.51
127	11.5475	10.7046	9.9142	-2.72	2.55
128	11.2242	10.3957	9.6197	-2.77	2.59
129	10.9112	10.0970	9.3352	-2.81	2.63
130	10.6084	9.8082	9.0602	-2.86	2.67
131	10.3151	9.5288	8.7945	-2.91	2.71
132	10.0312	9.2586	8.5378	-2.95	2.75
133	9.7563	8.9971	8.2895	-3.00	2.80
134	9.4901	8.7441	8.0495	-3.05	2.84
135	9.2322	8.4993	7.8175	-3.09	2.88
136	8.9824	8.2623	7.5931	-3.14	2.92
137	8.7404	8.0329	7.3760	-3.19	2.96
138	8.5059	7.8108	7.1660	-3.24	3.00
139	8.2787	7.5958	6.9629	-3.29	3.04
140	8.0584	7.3875	6.7664	-3.33	3.09

8.Dimensional drawings

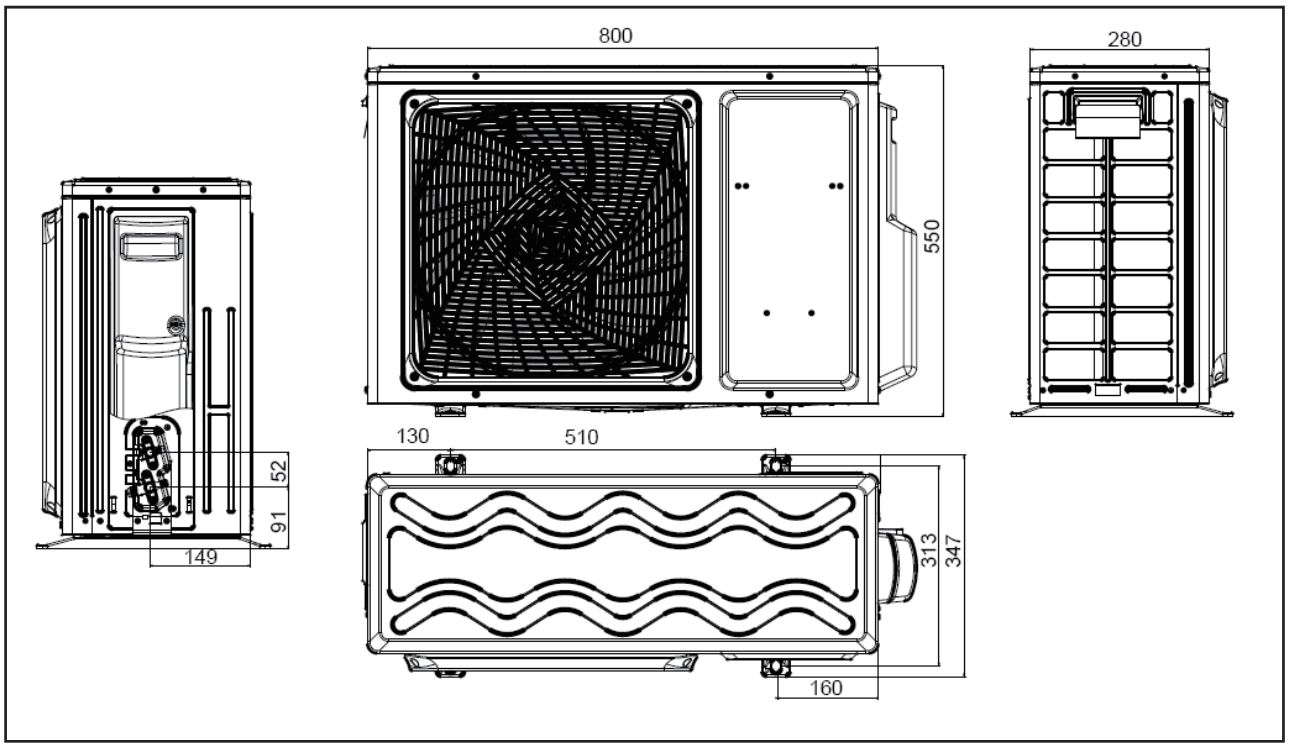

9.Center of gravity

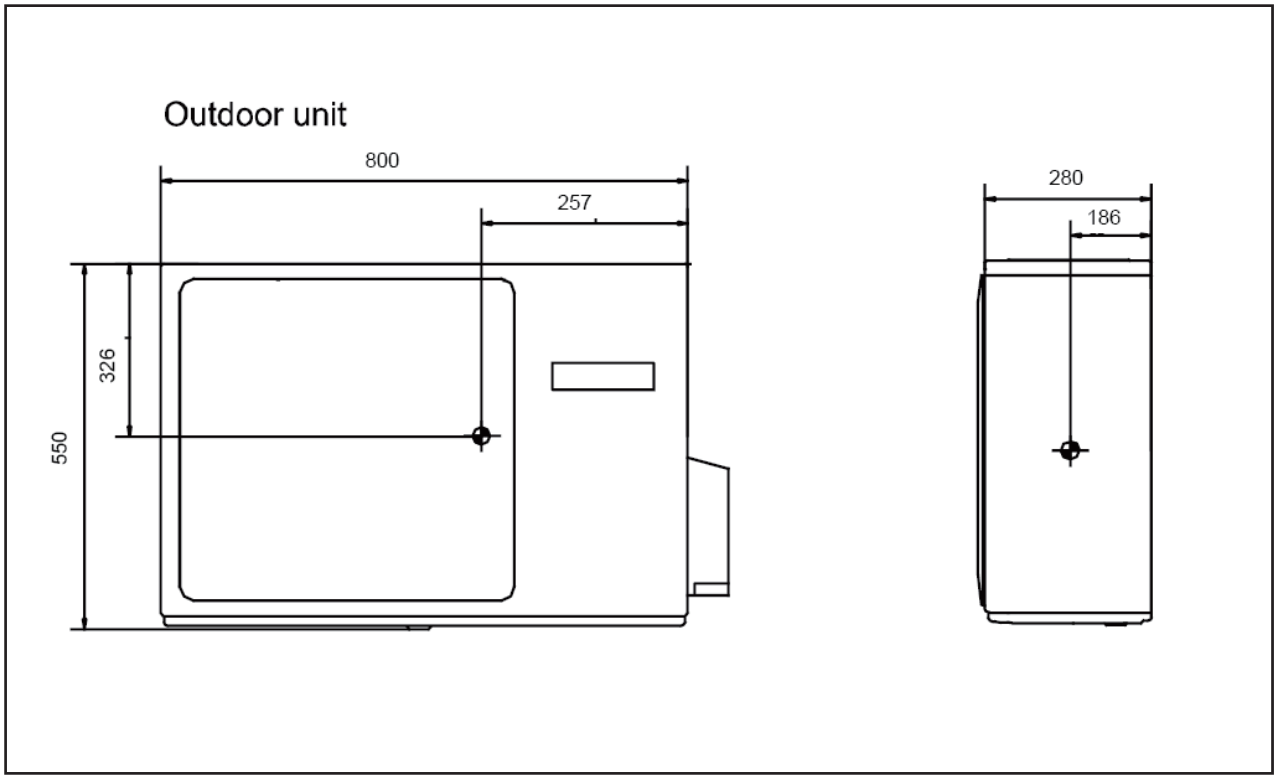

10Service Diagnosis

10.1 Caution for Diagnosis

The operation lamp flashes when any of the following errors is detected.

1. When a protection device of the indoor or outdoor unit is activated or when the thermistor malfunctions, disabling equipment operation.

2. When a signal transmission error occurs between the indoor and outdoor units. In either case, conduct the diagnostic procedure described in the following pages.

10.2 Parameter of primary electronic appliance

NO	Name	Parameter	Picture
1	Compressor	Rated voltage:220-230V Rated current:8.4A Rated frequency:50/60Hz Resistance:0.93Ω	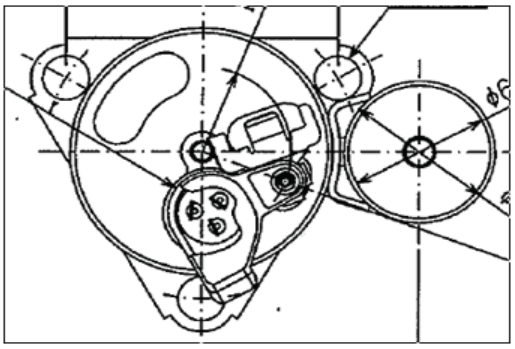
2	Fan motor	Rated voltage: DC 224-336V Rated current:0.236-0.288A Rated frequency:50/60Hz Rated power:41W	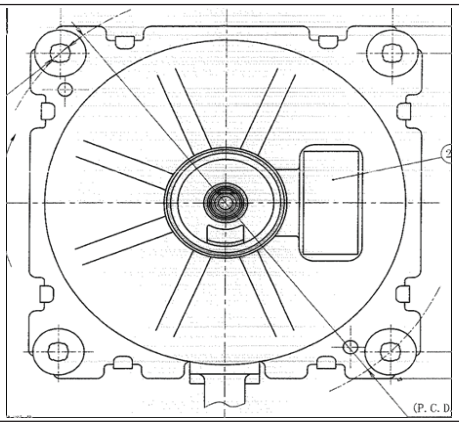
3	Reactor	Rated voltage:29.4V±10% Rated current:18A Rated frequency:50Hz Rated inductance:5.2mH±10%	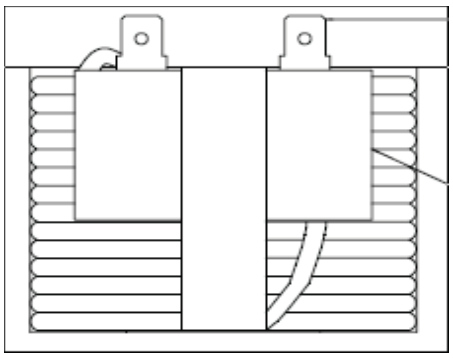
4	4-way valve	Rated voltage:220-240V Rated frequency:50/60Hz Power :4.5/3.5W	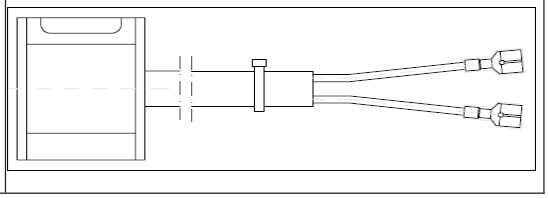

10.3 Problem Symptoms and Measures

Symptom	Check Item	Details of Measure
None of the units operates	Check the power supply.	Check to make sure that the rated voltage is supplied.
	Check the indoor PCB	Check to make sure that the indoor PCB is broken
Operation sometimes stops.	Check the power supply.	A power failure of 2 to 10 cycles can stop air conditioner operation.
Equipment operates but does not cool, or does not heat (only for heat pump)	Check for faulty operation of the electronic expansion valve.	Set the units to cooling operation, and compare the temperatures of the liquid side connection pipes of the connection section among rooms to check the opening and closing operation of the electronic expansion valves of the individual units.
	Diagnosis by service port pressure and operating current.	Check for insufficient gas.
Large operating noise and vibrations	Check the installation condition.	Check to make sure that the required spaces for installation (specified in the Technical Guide, etc.) are provided.

10.3 Error Codes and Description indoor display

	Code indication			fault description	Reference Page
	Indoor displaying panel code indication		Outdoor (LED1 flash times)		
	Other display	Only For 498 and 498A display (Red/Green Time Run □On ★Flash ■Off ,)			
Indoor and Outdoor	E7	■ ■ ★	15	Communication fault between indoor and outdoor units	Page.42
Indoor Malfunction	E1	★ ■ ■	--	Room temperature sensor failure	Page.31
	E2	★ □ □	--	Heat-exchange sensor failure	Page.31.
	E4	★ □ ★	--	Indoor EEPROM error	Page.32.
	E14	■ □ ★	--	Indoor fan motor malfunction	Page.33
Outdoor Malfunction	F12	■ ★ ■	1	Outdoor EEPROM error	Page.32
	F1	□ ★ ★	2	The protection of IPM	Page.36
	F22	★ ★ ■	3	Overcurrent protection of AC electricity for the outdoor model	Page.37
	F3	■ ★ ■	4	Communication fault between the IPM and outdoor PCB	Page.39
	F19	■ ★ □	6	Power voltage is too high or low	Page.40
	F4	■ ★ ■	8	Overheat protection for Discharge temperature	Page.41
	F21	□ □ ★	10	Defrost temperature sensor failure	Page.31
	F7	■ ★ ■	11	Suction temperature sensor failure	Page.31
	F6	□ ★ ■	12	Ambient temperature sensor failure	Page.31
	F25	★ □ ■	13	Discharge temperature sensor failure	Page.31
	F11	■ ★ ■	18	deviate from the normal for the compressor	Page.44
	F28	■ ★ ■	19	Loop of the station detect error	Page.44
	F2	■ ★ □	24	Overcurrent of the compressor	Page.37
	F23	■ ★ □	25	Overcurrent protection for single-phase of the compressor	Page.43
	F8	■ ★ □	9	Outdoor DC fan motor fault	Page.43

10.4.1 Thermistor or Related Abnormality

Indoor Display	E1: Room temperature sensor failure E2: Heat-exchange sensor failure
Outdoor display	LED1 flash 10 times：Defrost temperature sensor failure LED1 flash 11 times：Suction temperature sensor failure LED1 flash 12 times：Ambient temperature sensor failure LED1 flash 13 times：Discharge temperature sensor failure
Method of Malfunction Detection	The temperatures detected by the thermistors are used to determine thermistor errors
Malfunction Decision Conditions	When the thermistor input is more than 4.92V or less than 0.08V during compressor operation. ● Note: The values vary slightly in some models
Supposed Causes	■ Faulty connector connection ■ Faulty thermistor ■ Faulty PCB
Troubleshooting	* Caution Be sure to turn off power switch before connect or disconnect connector, or else parts damage may be occurred.

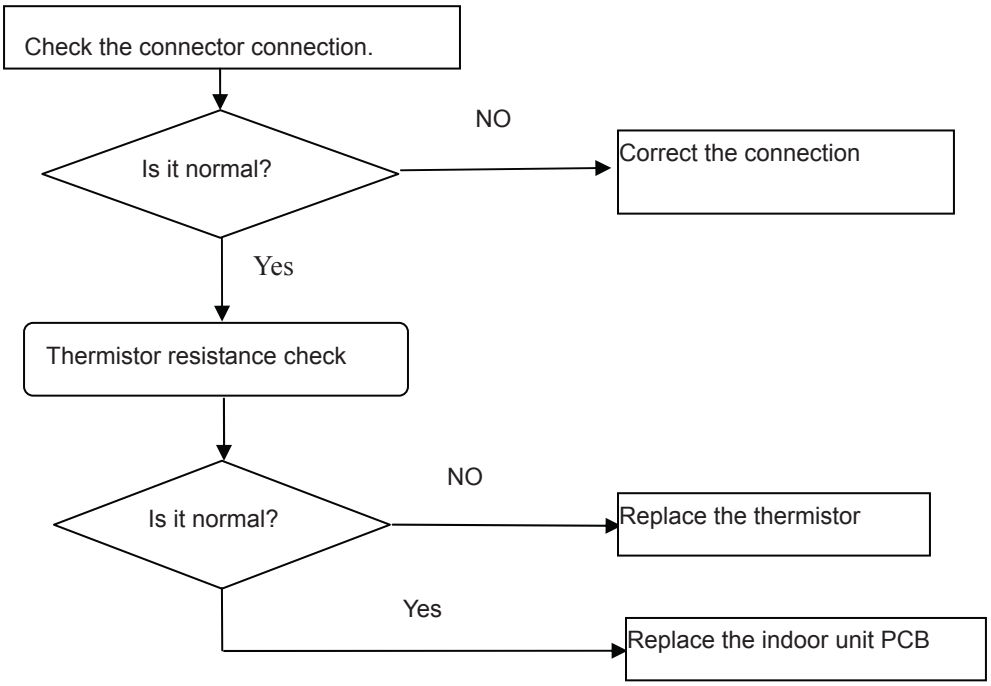

Thermistor resistance check method:

Remove the connector of the thermistor on the PCB, and measure the resistance of thermistor using tester.The relationship between normal temperature and resistance is shown in the value of indoor thermistor.

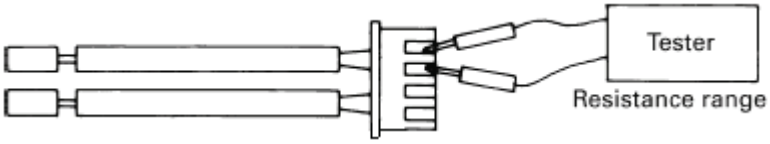

10.4.2 EEPROM abnormal

Indoor Display	E4: Indoor EEPROM error
Indoor display	F12: Outdoor EEPROM error; Outdoor LED1 flash 1 times
Method of Malfunction Detection	The Data detected by the EEPROM are used to determine MCU
Malfunction Decision Conditions	When the data of EEPROM is error or the EEPROM is damaged
Supposed Causes	■ Faulty EEPROM data ■ Faulty EEPROM ■ Faulty PCB

Troubleshooting * Caution Be sure to turn off power switch before connect or disconnect connector, or parts damage may be occurred.

Replace the indoor or outdoor mainboard.

10.4.3 Indoor DC fan motor fault

Indoor display	E14
Method of Malfunction Detection	DC fan motor is detected by checking the fan running condition and so on
Malfunction Decision Conditions	when the detected rotation feedback signal don't received in 2 minutes
Supposed Causes	■ DC fan motor protection dues to the DC fan motor faulty ■ DC fan motor protection dues to faulty PCB
Troubleshooting	* Caution Be sure to turn off power switch before connect or disconnect connector, or parts damage may be occurred.

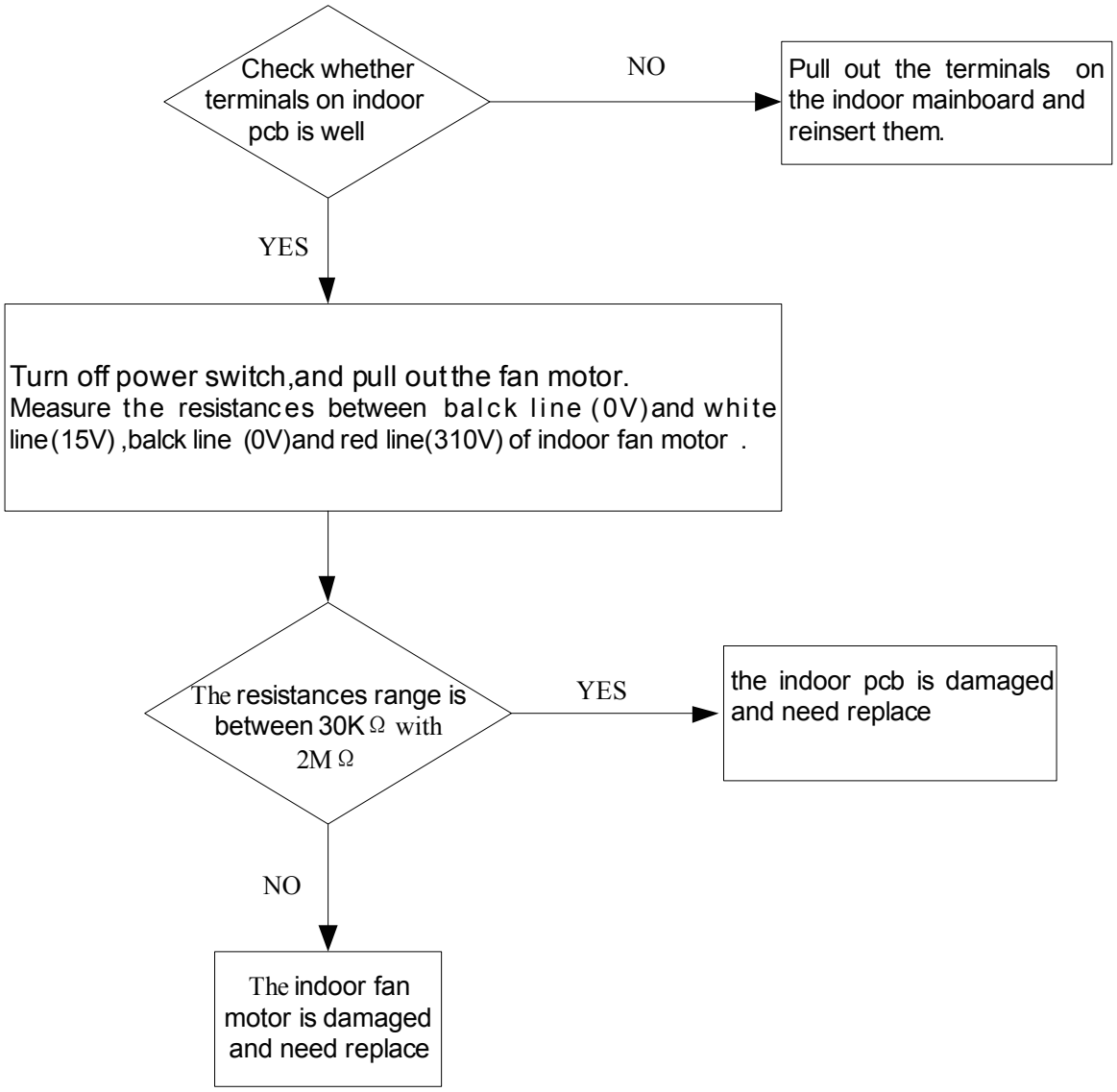

10.4.3 Indoor AC fan motor malfunction

Indoor Display	E14
Method of Malfunction Detection	The rotation speed detected by the Hall IC during fan motor operation is used to determine abnormal fan motor operation
Malfunction Decision Conditions	when the detected rotation feedback signal don't received in 2 minutes
Supposed Causes	■ Operation halt due to breaking of wire inside the fan motor. ■ Fan motor overheat protection ■ Operation halt due to breaking of the fan motor lead wires ■ Detection error due to faulty indoor unit PCB
Troubleshooting	* Caution Be sure to turn off power switch before connect or disconnect connector, or else parts damage may be occurred.

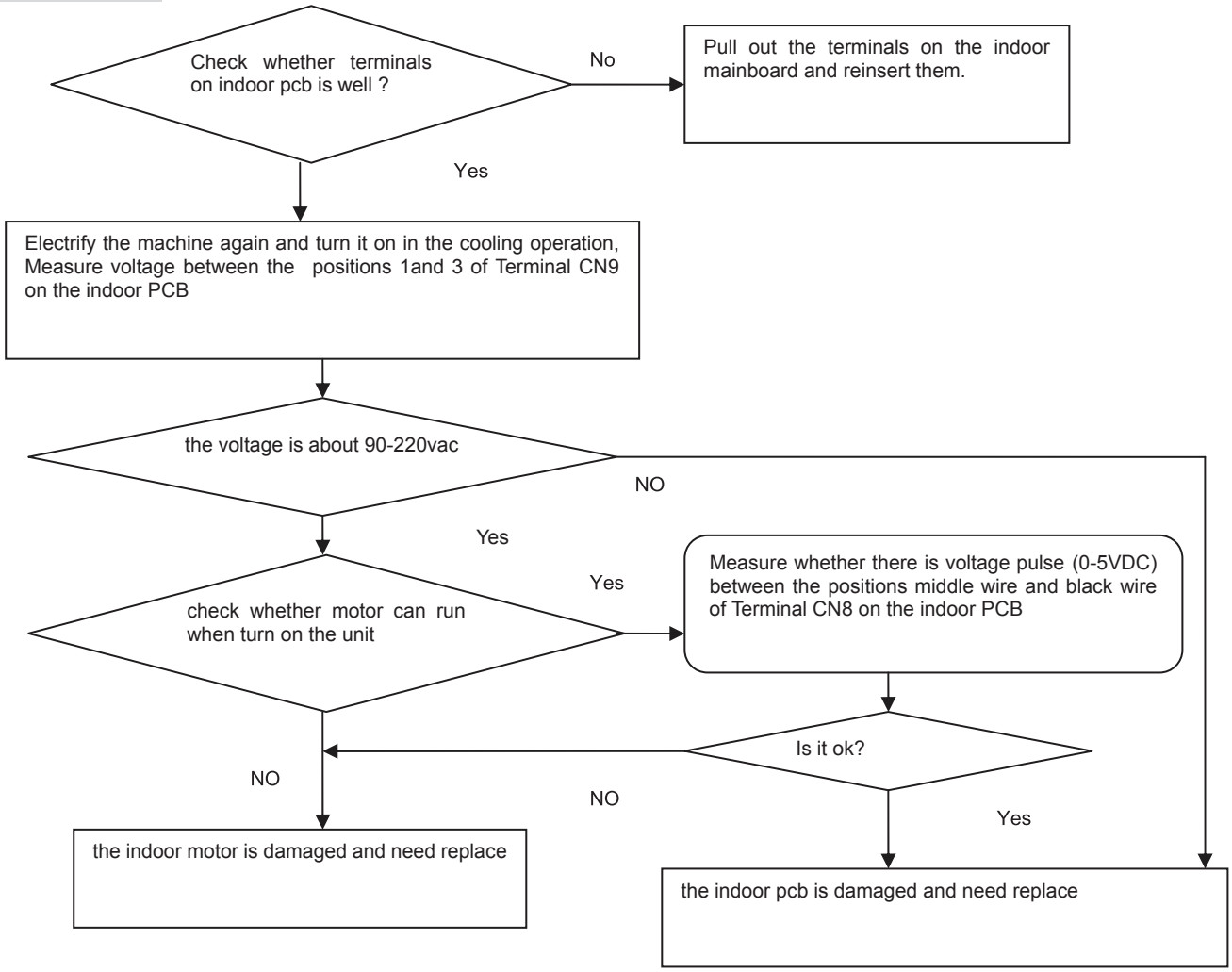

10.4.4 Outdoor DC fan motor fault

Outdoor display LED1 flash 9 times

Method of Malfunction Detection	DC fan motor is detected by checking the fan running condition and so on
Malfunction Decision Conditions	when the detected rotation feedback signal don't received in 2 minutes
Supposed Causes	■ DC fan motor protection dues to the DC fan motor faulty ■ DC fan motor protection dues to faulty PCB
Troubleshooting	* Caution Be sure to turn off power switch before connect or disconnect connector, or parts damage may be occurred.

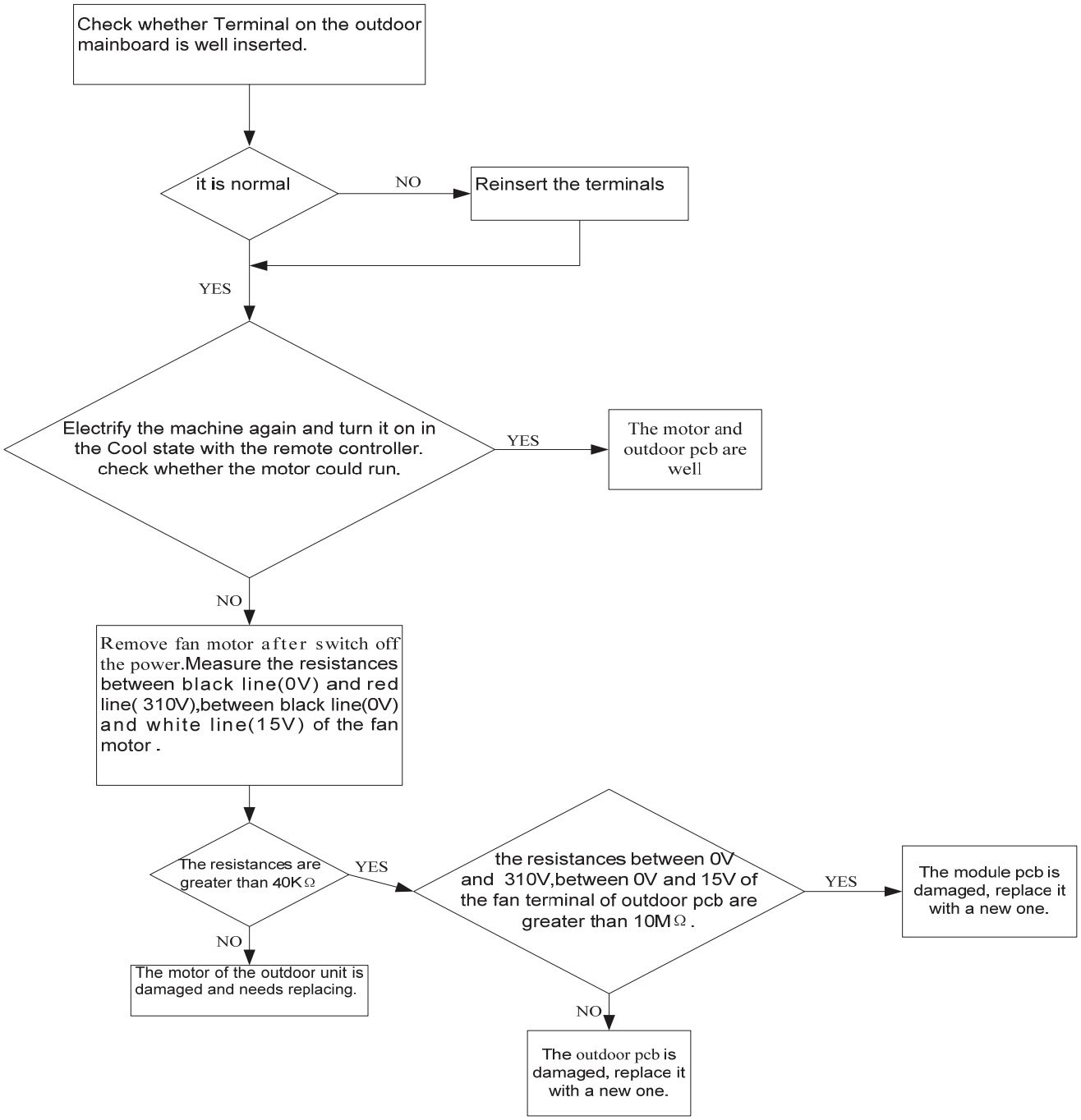

10.4.5 IPM protection

Outdoor display: LED1 flash 2 times

Method of Malfunction Detection

IPM protection is detected by checking the compressor running condition and so on

Malfunction Decision Conditions

- The system leads to IPM protection due to over current
- The compressor faulty leads to IPM protection
- circuit component of IPM is broken and led to IPM protection

Supposed Causes

- IPM protection dues to the compressor faulty
- IPM protection dues to faulty PCB of IPM module
- Compressor wiring disconnected

Troubleshooting

* Caution Be sure to turn off power switch before connect or disconnect connector, or else parts damage may be occurred.

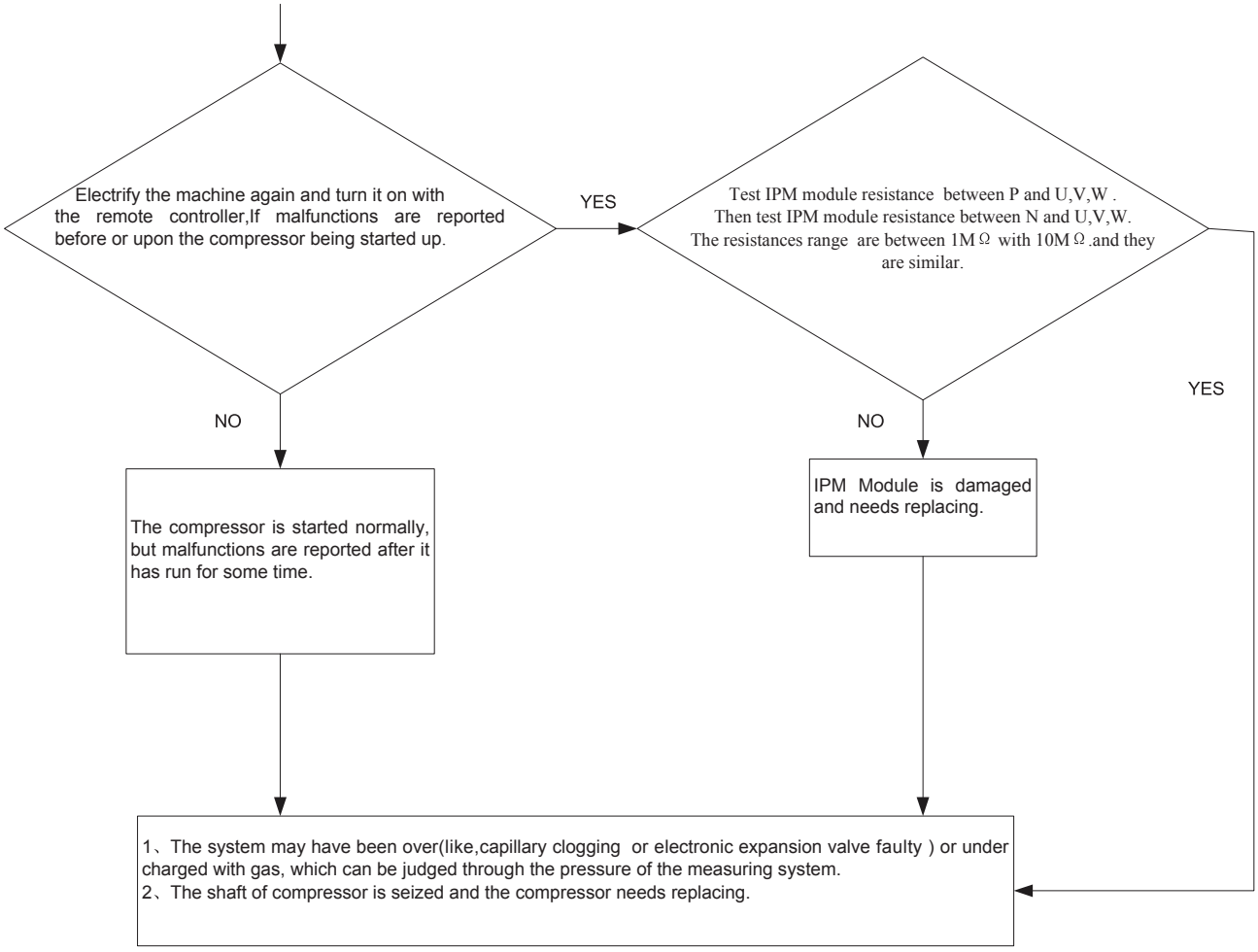

10.4.6 Over-current of the compressor

Outdoor Display:	LED1 flash 3 or 24 or 25 times
Method of Malfunction Detection	The current of the compressor is too high
Malfunction Decision Conditions	when the IPM Module is damaged or the compressor is damaged. power supply voltage is too low or too high
Supposed Causes	■ Faulty IPM Module ■ Faulty compressor ■ Faulty power supply
Troubleshooting	* Caution Be sure to turn off power switch before connect or disconnect connector, or parts damage may be occurred.

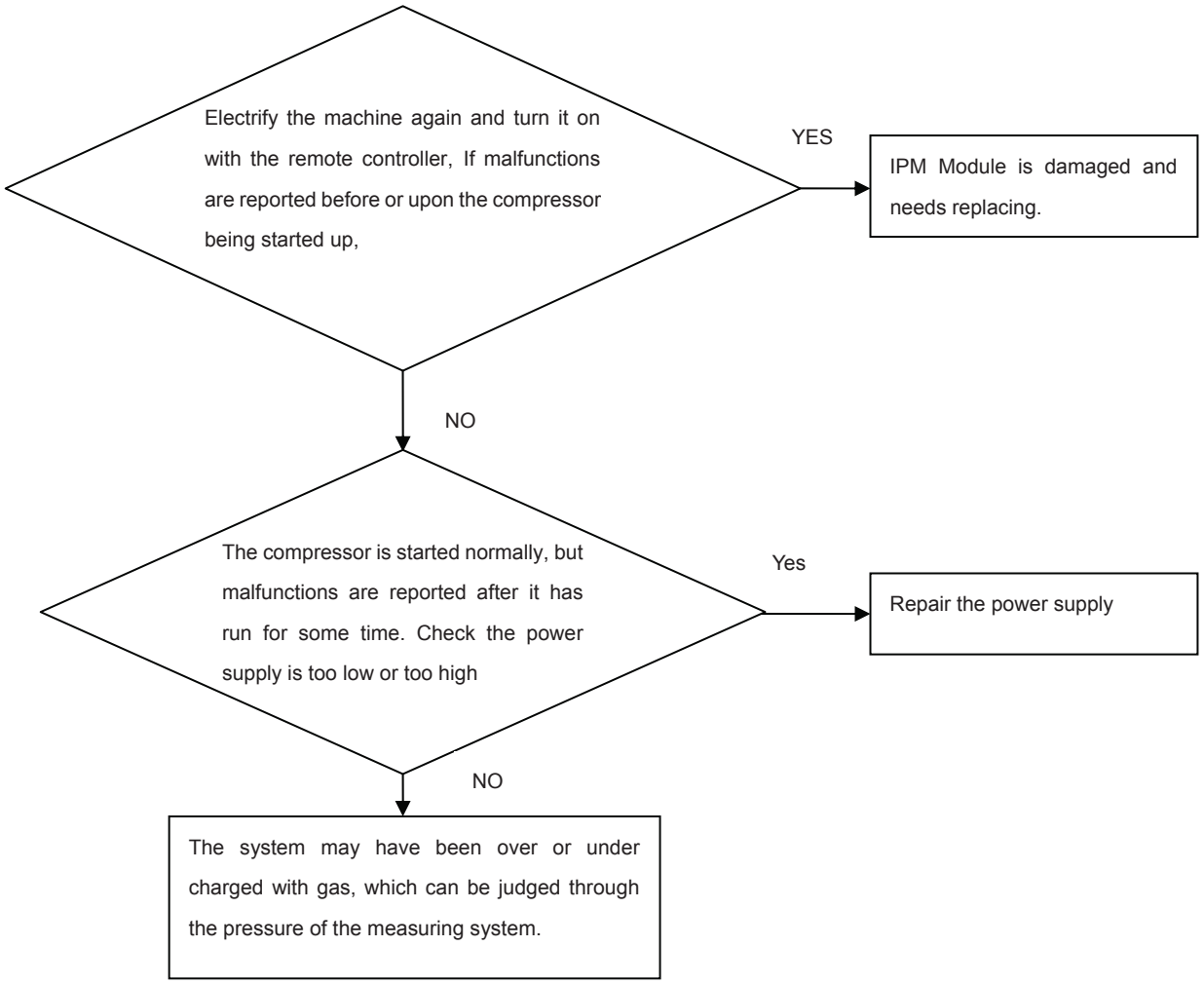

10.4.7 The communication fault between IPM and outdoor PCB

Outdoor display: LED1 flash 4 times

Method of Malfunction Detection: Communication is detected by checking the IPM module and the outdoor PCB

Malfunction Decision Conditions:
- The outdoor PCB broken leads to communication fault
- The IPM module broken leads to communication fault

Supposed Causes:
- The outdoor PCB is broken
- The IPM module is broken
- Communication wiring disconnected

Troubleshooting * Caution Be sure to turn off power switch before connect or disconnect connector, or else parts damage may be occurred.

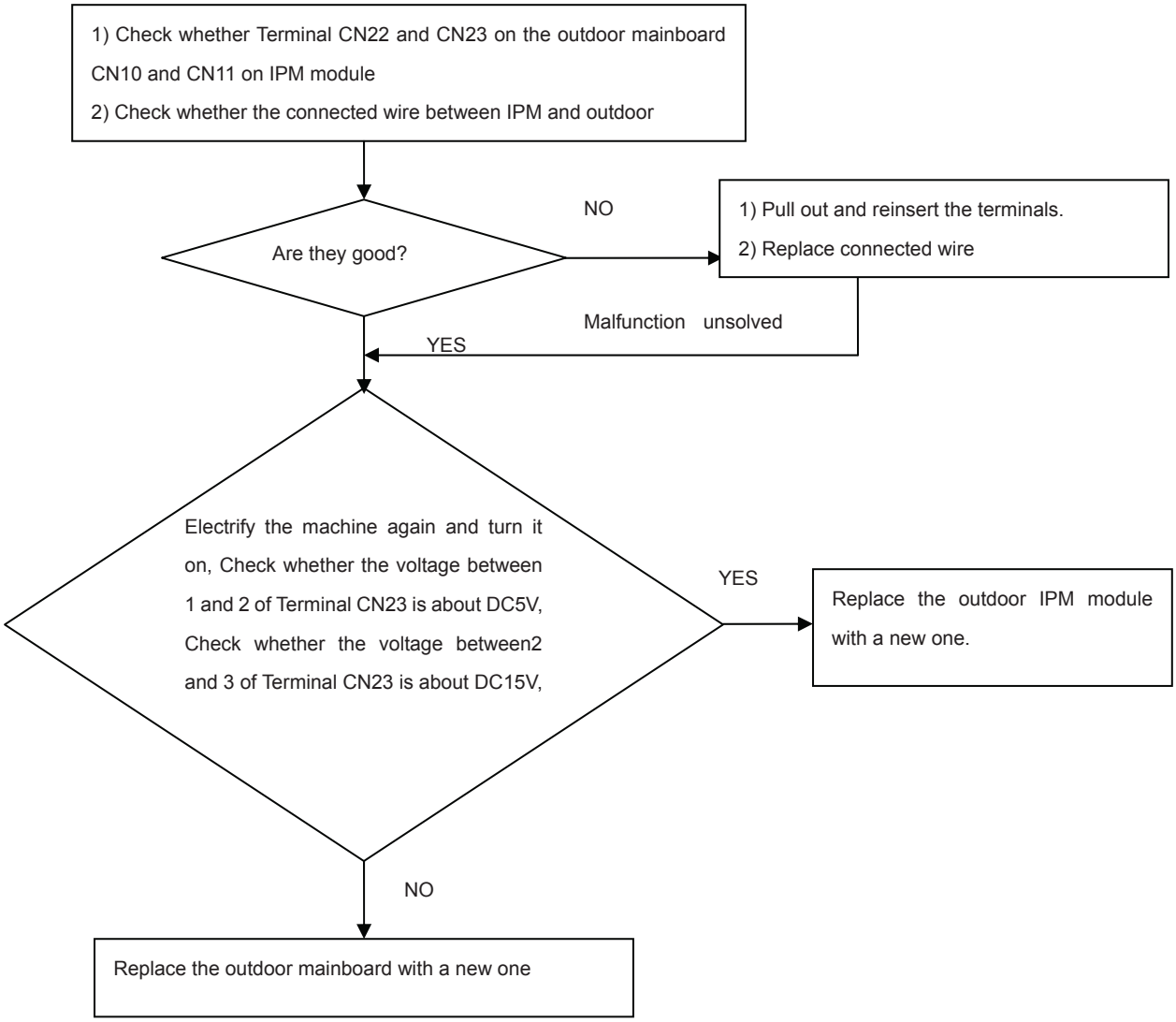

10.4.8 Power Supply Over or under voltage fault

Outdoor display: LED1 flash 6 times The power supply is over voltage

Method of Malfunction Detection: An abnormal voltage rise or fall is detected by checking the specified voltage detection circuit.

Malfunction Decision Conditions: An voltage signal is fed from the voltage detection circuit to the microcomputer

Supposed Causes:
- Supply voltage not as specified
- the IPM module is broken
- the outdoor PCB is broken

Troubleshooting * Caution Be sure to turn off power switch before connect or disconnect connector, or else parts damage may be occurred.

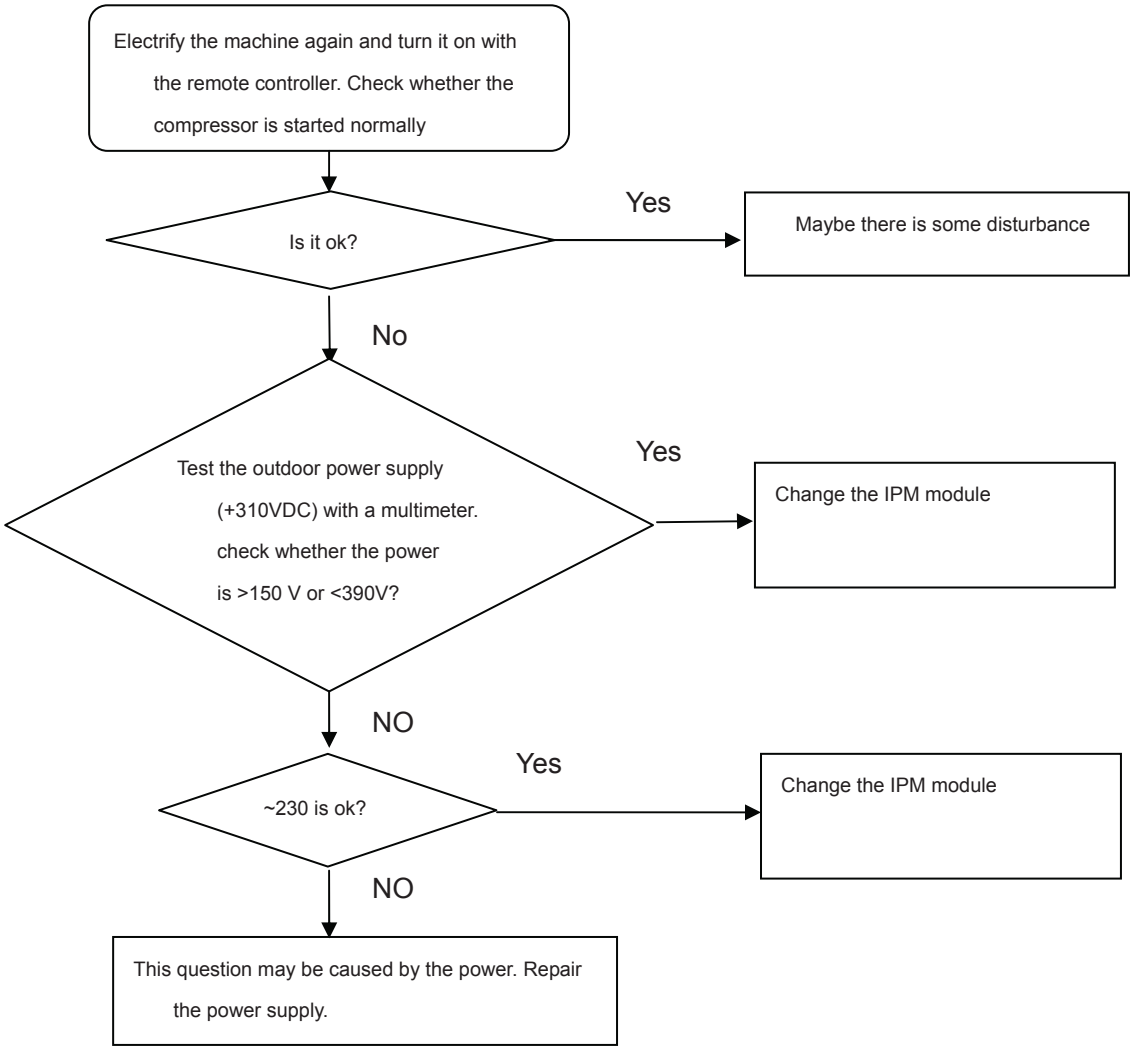

10.4.9 Overheat Protection For Discharge Temperature

Outdoor display: LED1 flash 8 times

Method of Malfunction Detection: The Discharge temperature control is checked with the temperature being detected by the Discharge pipe thermistor

Malfunction Decision Conditions: when the compressor discharge temperature is above 116℃

Supposed Causes:
- Electronic expansion valve defective
- Faulty thermistor
- Faulty PCB

Troubleshooting: * Caution Be sure to turn off power switch before connect or disconnect connector, or else parts damage may be occurred.

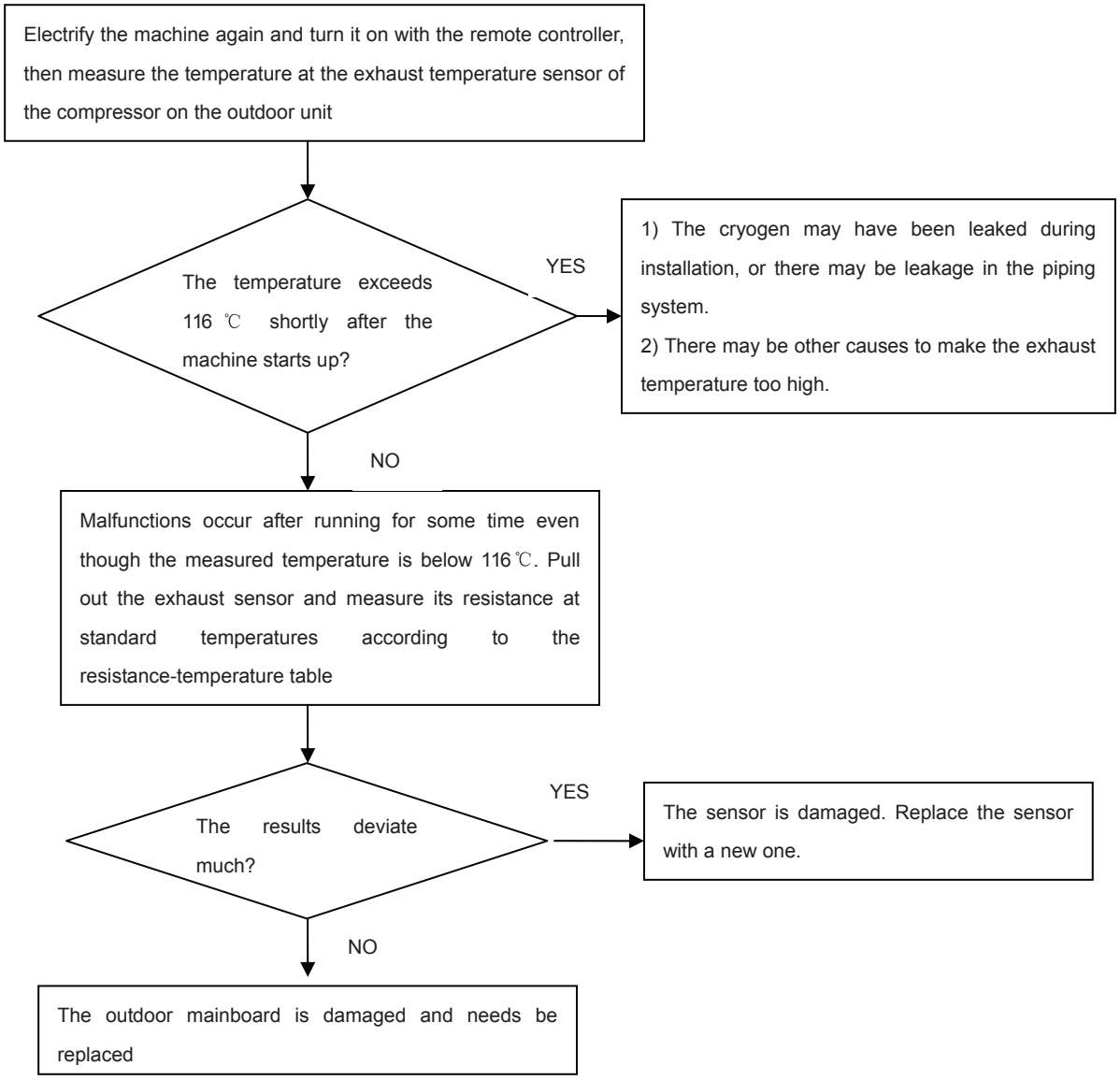

10.4.10 The communication fault between indoor and outdoor

Indoor display outdoor display	E7 LED1 flash 15 times
Method of Malfunction Detection	Communication is detected by checking the indoor PCB and the outdoor PCB.
Malfunction Decision Conditions	■ The outdoor PCB broken leads to communication fault. ■ The indoor PCB broken leads to communication fault.
Supposed Causes	■ Communication wiring disconnected. ■ The indoor PCB is broken. ■ The outdoor PCB is broken. ■ The Module PCB is broken.
Troubleshooting	* Caution Be sure to turn off power switch before connect or disconnect connector, or else parts damage may be occurred.

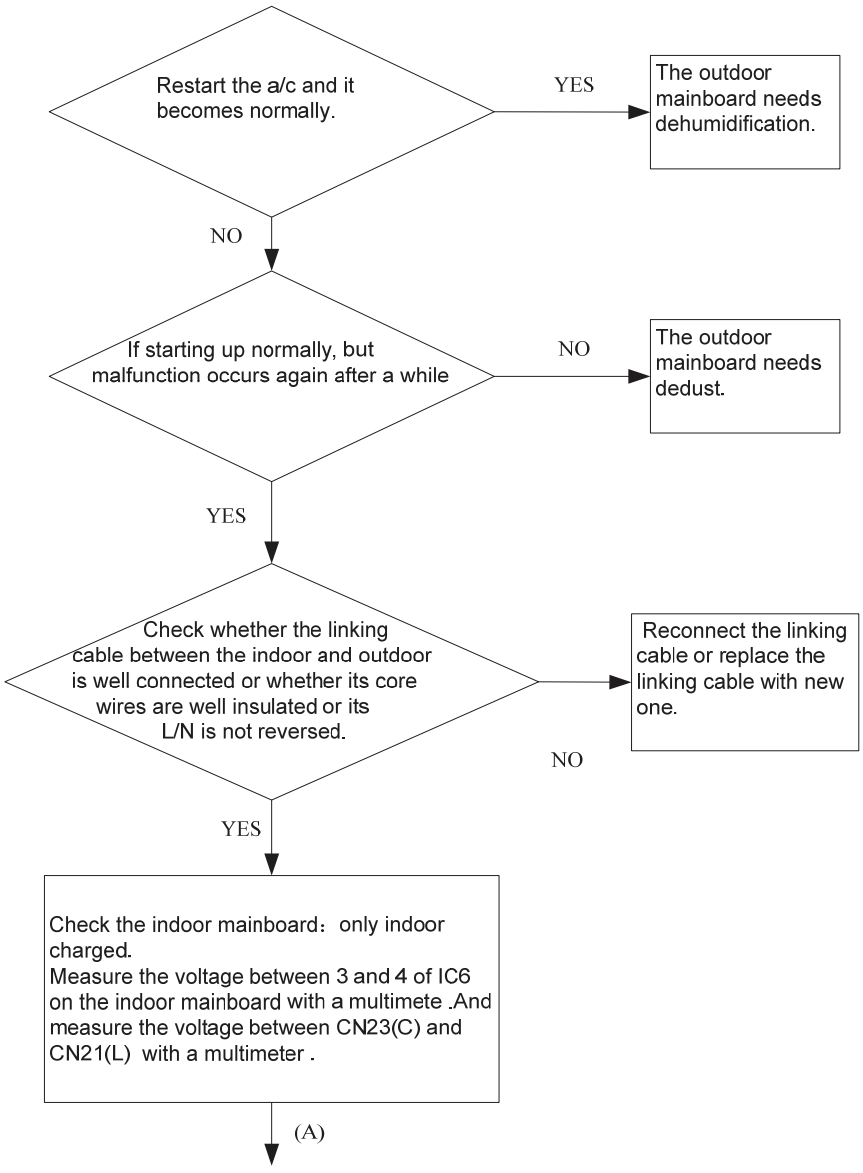

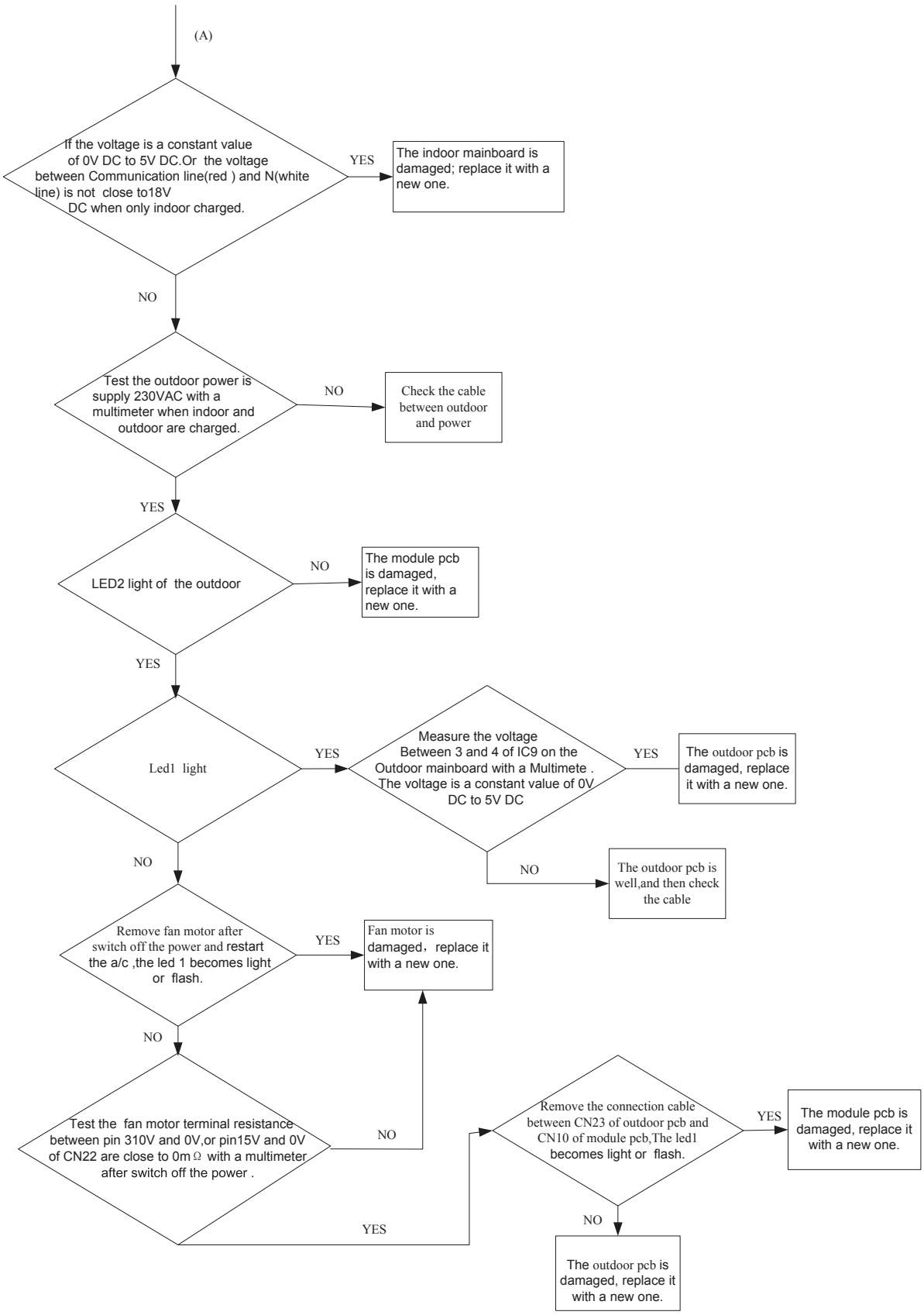
(A)
If the voltage is a constant value of 0V DC to 5V DC.Or the voltage between Communication line(red) and N(white line) is not close to18V DC when only indoor charged.
YES
The indoor mainboard is damaged; replace it with a new one.
NO
Test the outdoor power is supply 230VAC with a multimeter when indoor and outdoor are charged.
NO
Check the cable between outdoor and power
YES
LED2 light of the outdoor
NO
The module pcb is damaged, replace it with a new one.
YES
Led1 light
YES
Measure the voltage Between 3 and 4 of IC9 on the Outdoor mainboard with a Multimete . The voltage is a constant value of 0V DC to 5V DC
YES
The outdoor pcb is damaged, replace it with a new one.
NO
The outdoor pcb is well,and then check the cable
NO
Remove fan motor after switch off the power and restart the a/c ,the led 1 becomes light or flash.
YES
Fan motor is damaged，replace it with a new one.
NO
Test the fan motor terminal resistance between pin 310V and 0V,or pin15V and 0V of CN22 are close to 0mΩ with a multimeter after switch off the power .
NO
YES
Remove the connection cable between CN23 of outdoor pcb and CN10 of module pcb,The led1 becomes light or flash.
YES
The module pcb is damaged, replace it with a new one.
NO
The outdoor pcb is damaged, replace it with a new one.

10.4.11 Loss of synchronism detection
Inverter side current detection is abnormal

Outdoor Display	LED1 flash 18 times LED1 flash 19 times
Method of Malfunction Detection	The position of the compressor rotor can not detected normally
Malfunction Decision Conditions	when the wiring of compressor is wrong or the connection is poor; or the compressor is damaged
Supposed Causes	■ Faulty The wiring of compressor ■ Faulty compressor ■ Faulty PCB
Troubleshooting	* Caution Be sure to turn off power switch before connect or disconnect connector, or parts damage may be occurred.

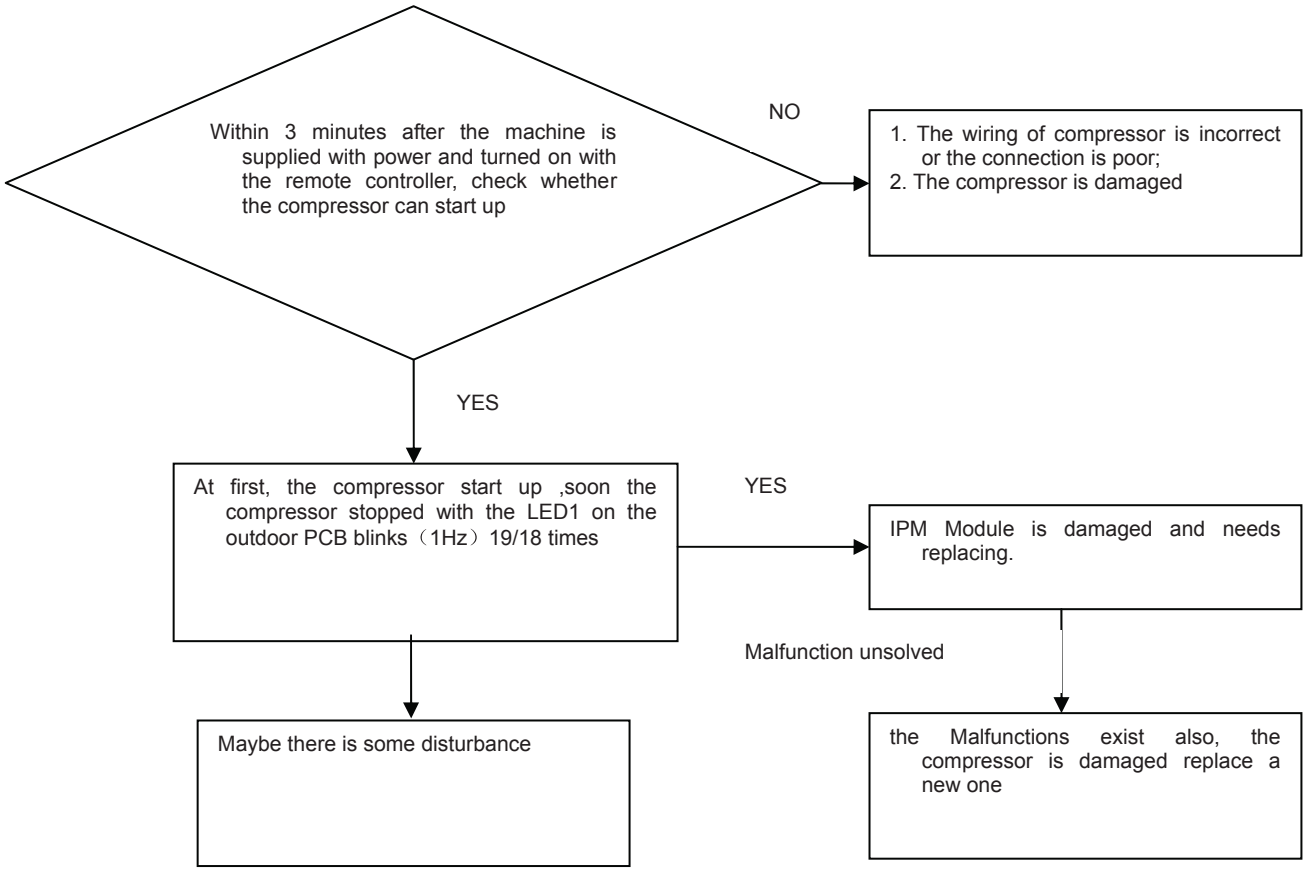

10.4.12 High work-intense protection

Outdoor display	LED1 flash 21 times
Method of Malfunction Detection	High work-intense control is activated in the heating mode if the temperature being sensed by the heat exchanger thermistor exceeds the limit.
Malfunction Decision Conditions	Activated when the temperature being sensed by the heat exchanger rises above 65℃ .
Supposed Causes	■ Faulty electronic expansion valve ■ Dirty heat exchanger ■ Faulty heat-exchange sensor ■ Insufficient gas
Troubleshooting	* Caution Be sure to turn off power switch before connect or disconnect connector, or else parts damage may be occurred.

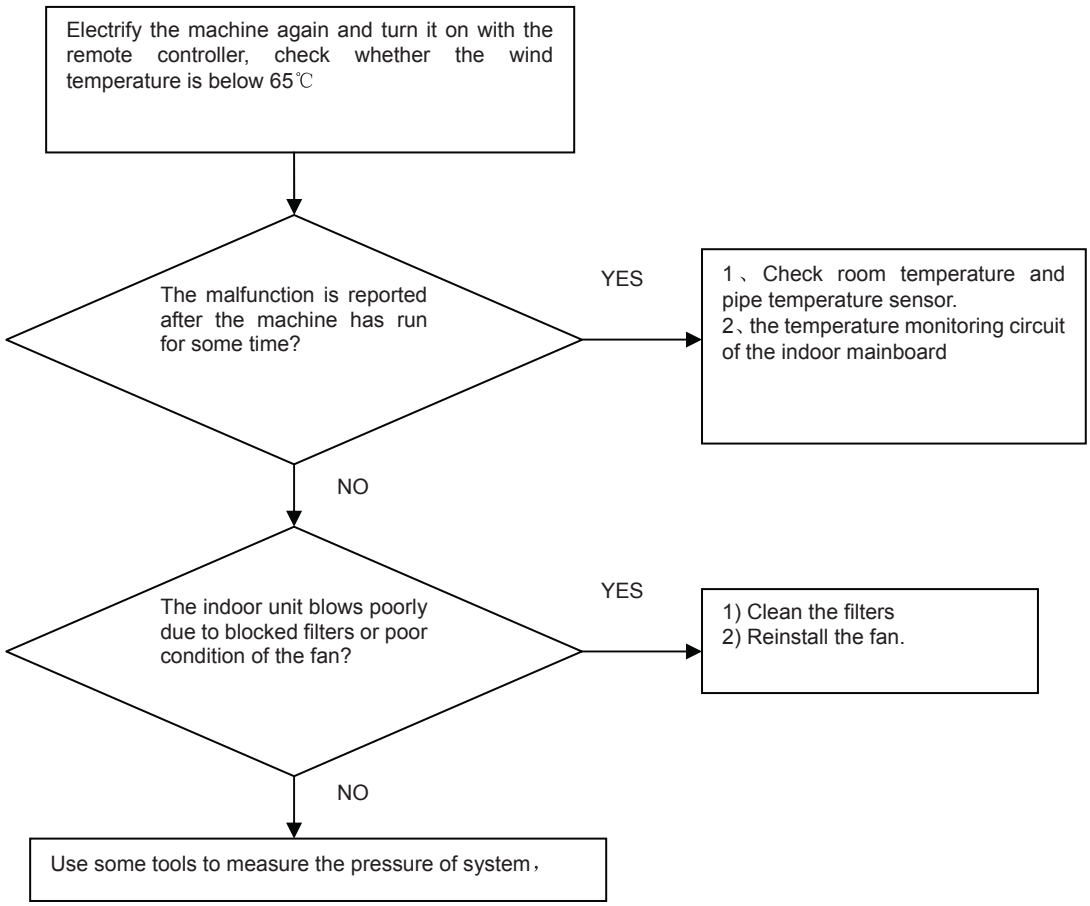

11 Performance Curves Diagram

11.1 cooling capacity-temp. curves

(12+12)performancecurves								
cooling value-temerature table								
indoor temp.	outdoor temp.(humidity 46%)							
DB/WB	18℃	20℃	25℃	32℃	35℃	40℃	43℃	46℃
18/12℃	3121	3089	4142	3710	4339	4232	3911	2750
18/14℃	3187	3154	4228	3797	4607	4339	4018	2829
20/15℃	3253	3220	4314	3883	4714	4446	4125	2907
22/16℃	3351	3319	4401	4012	4821	4554	4286	2986
25/18℃	3549	3450	4530	4271	5089	4821	4661	3300
27/19℃	3647	3516	4616	4401	5250	4982	4768	3379
30/22℃	3877	3844	4961	4746	5732	5518	5357	3811
32/23℃	3910	3877	5048	4832	5839	5571	5411	3850
32/24℃	3976	3943	5134	4918	5946	5679	5518	3929

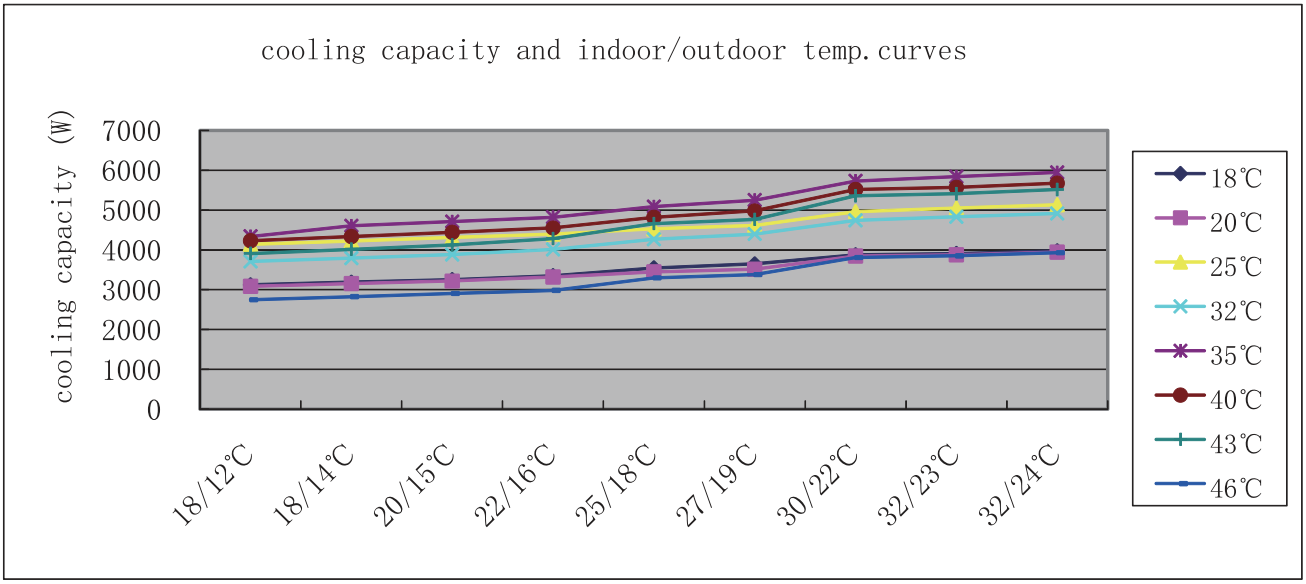

11.2 heating capacity-temp.curves

(12+12)performancecurves			
heating capacity and indoor/outdoor temp.table			
outdoor temp.	indoor temp.(humidity 46%)		
DB/WB	15℃	20℃	25℃
-15℃	3704	2736	2640
-5℃	5692	5187	4801
5℃	7407	6693	6241
7/6℃	6570	6120	5550
15℃	5017	4860	4051
20℃	4569	4522	3670
25℃	4713	4678	3778

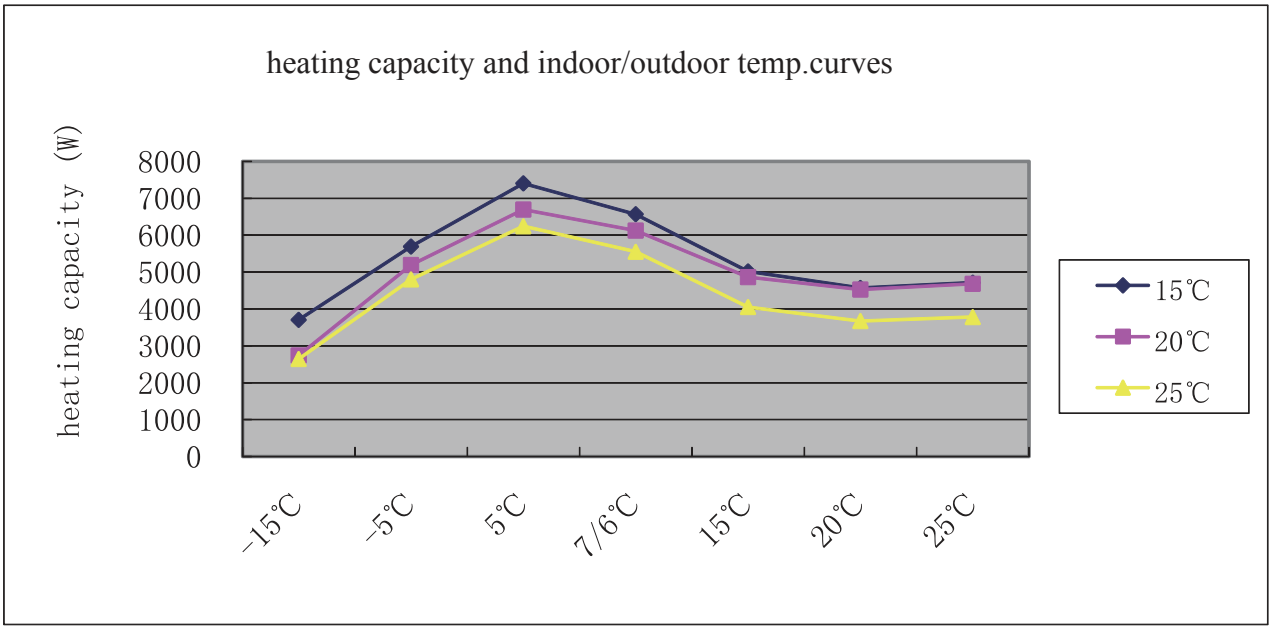

11.3 Coolingpower consumption-temp.curves

(12+12)performancecurves								
power consumption value-temp.table								
indoor temp.	outdoor temp.(humidity 46%)							
DB/WB	18℃	20℃	25℃	32℃	35℃	40℃	43℃	46℃
18/12℃	468	471	914	952	1494	1594	1502	583
18/14℃	477	484	930	968	1519	1627	1668	595
20/15℃	487	499	947	985	1544	1652	1710	608
22/16℃	496	505	968	1001	1569	1668	1743	670
25/18℃	512	518	947	1023	1619	1710	1793	694
27/19℃	536	527	968	1044	1643	1726	1826	701
30/22℃	543	549	1006	1088	1718	1843	1926	750
32/23℃	552	539	1017	1121	1743	1876	1951	837
32/24℃	561	530	1034	1142	1768	1909	1975	899

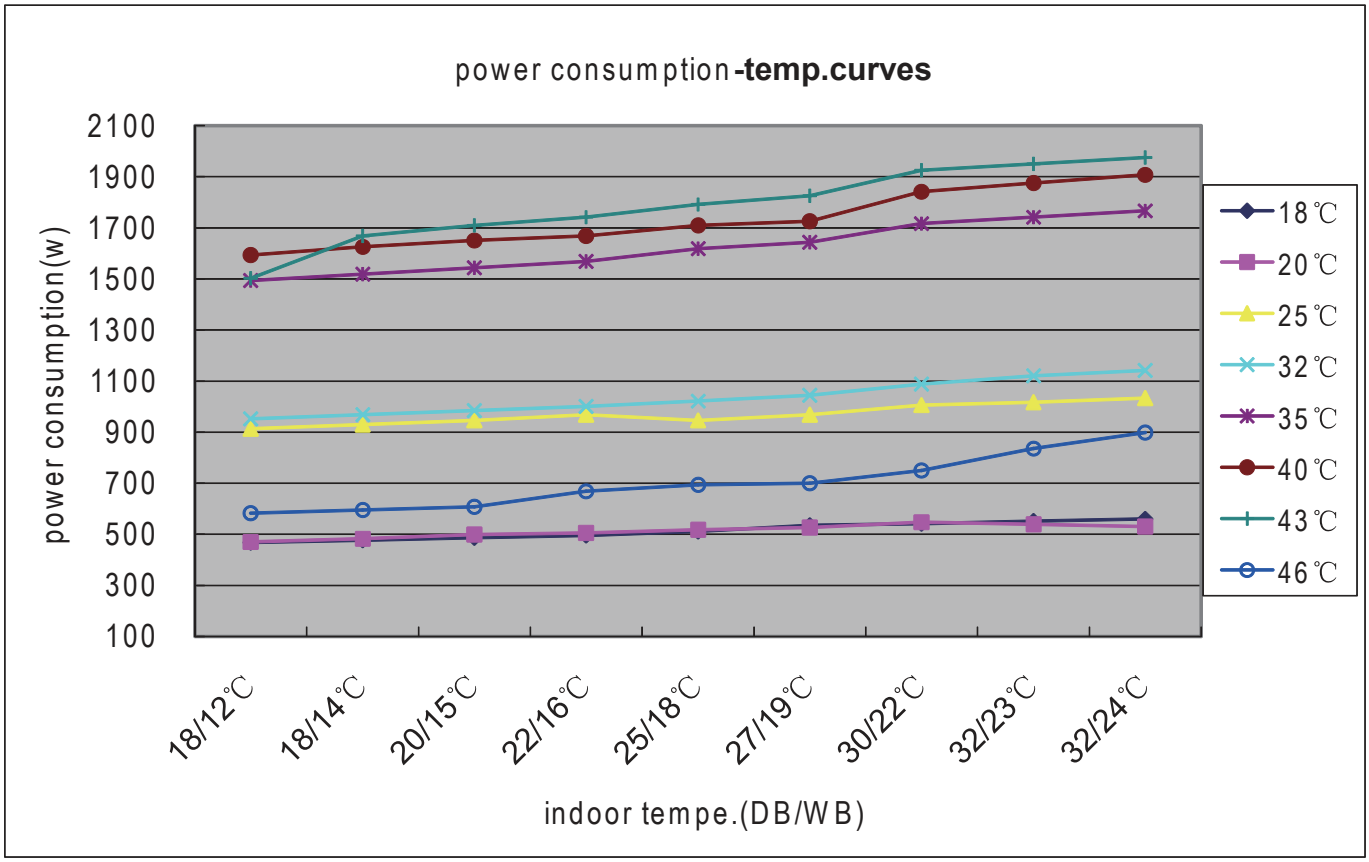

11.4 heating power consumption-temp.curves

(12+12)performancecurves			
power consumption value-temp.table			
outdoor temp.	indoor temp.(humidity 46%)		
DB/WB	15℃	20℃	25℃
-15℃	1388	1495	1633
-5℃	1665	1644	1986
5℃	1879	2135	2263
7/6℃	1514	1668	1821
15℃	703	771	838
20℃	464	483	525
25℃	466	488	527

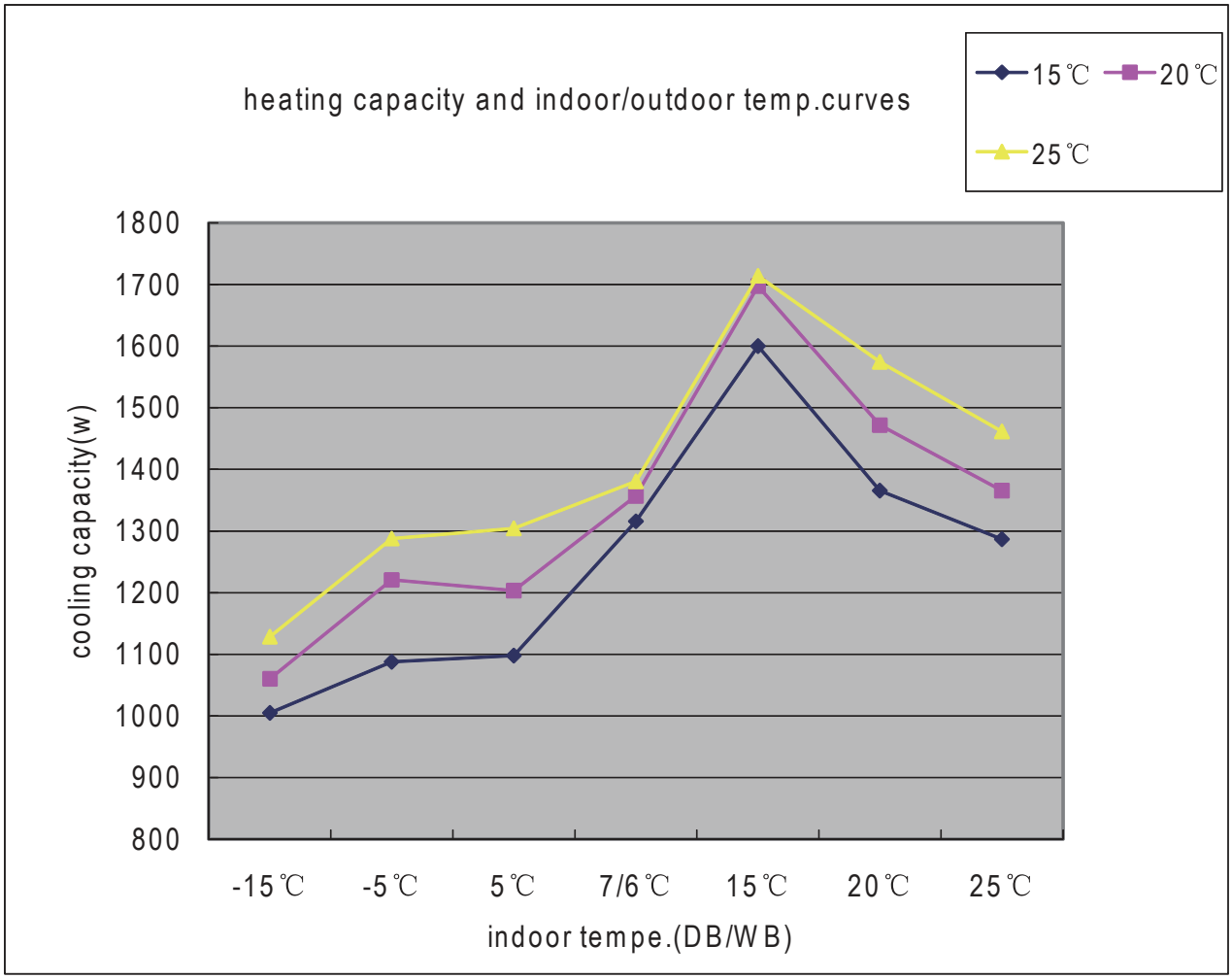

11.5 Cooling discharge pressure

(12+12)performancecurves			
cooling discharge pressure.table			
outdoor temp. (humidity 46%)	indoor temp.		
DB/WB	16℃	19℃	22℃
15℃	1562	1616	1670
25℃	2331	2355	2403
30℃	2331	2379	2403
35℃	3248	3314	3414
40℃	3281	3447	3447
45℃	2154	2154	2237

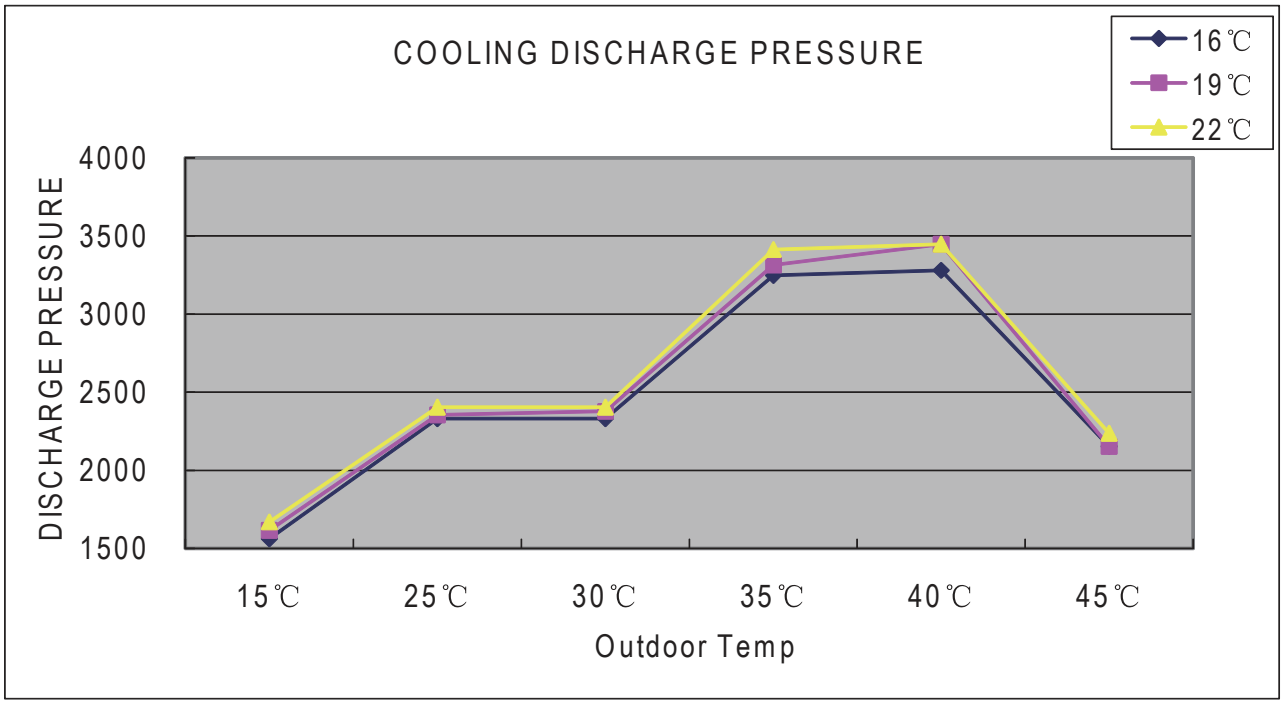

11.6 cooling suction pressure curves

(12+12)performance curves			
cooling suction pressure.table			
outdoor temp. (humidity 46%)	indoor temp.		
DB/WB	16℃	19℃	22℃
15℃	377	390	403
25℃	563	568	580
30℃	563	574	580
35℃	784	800	824
40℃	792	832	832
45℃	520	520	540

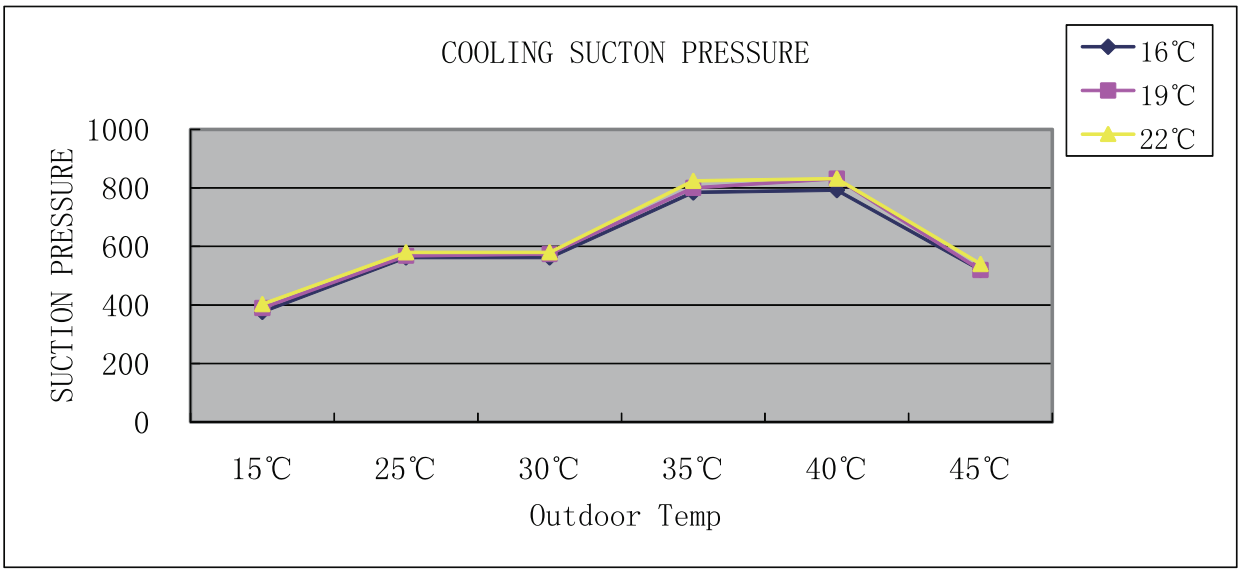

11.7 heating discharge pressure curves

(12+12)performancecurves			
Heating discharge pressure.table			
outdoor temp. (humidity 46%)	indoor temp.		
DB/WB	15℃	20℃	25℃
−15℃	3003	3133	3231
−10℃	3068	3166	3264
−5℃	3117	3198	3296
0℃	3166	3231	3329
5℃	3231	3264	3362
10℃	2957	3046	3090
15℃	2420	2492	2516
20℃	2317	2362	2384

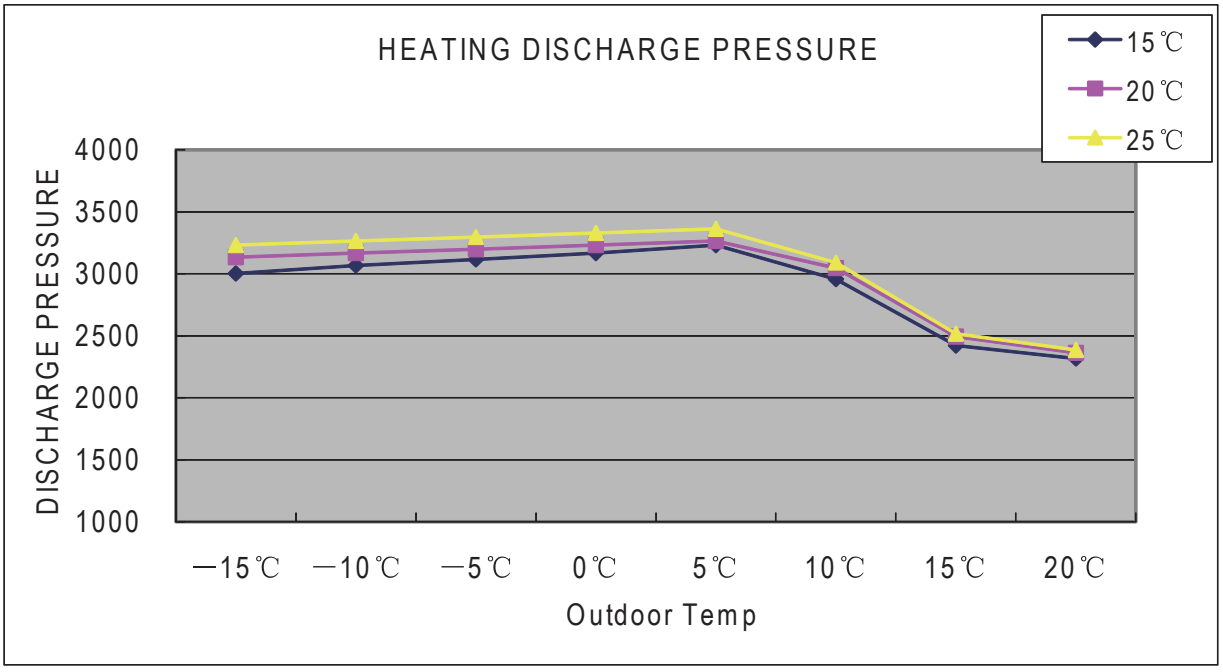

11.8 heating suction pressure curves

(12+12)performancecurves			
heating discharge pressure.table			
outdoor temp. (humidity 46%)	indoor temp.		
DB/WB	15℃	20℃	25℃
−15℃	759	792	816
−10℃	775	800	825
−5℃	787	808	833
0℃	800	816	841
5℃	816	825	849
10℃	747	770	781
15℃	611	630	636
20℃	585	597	602

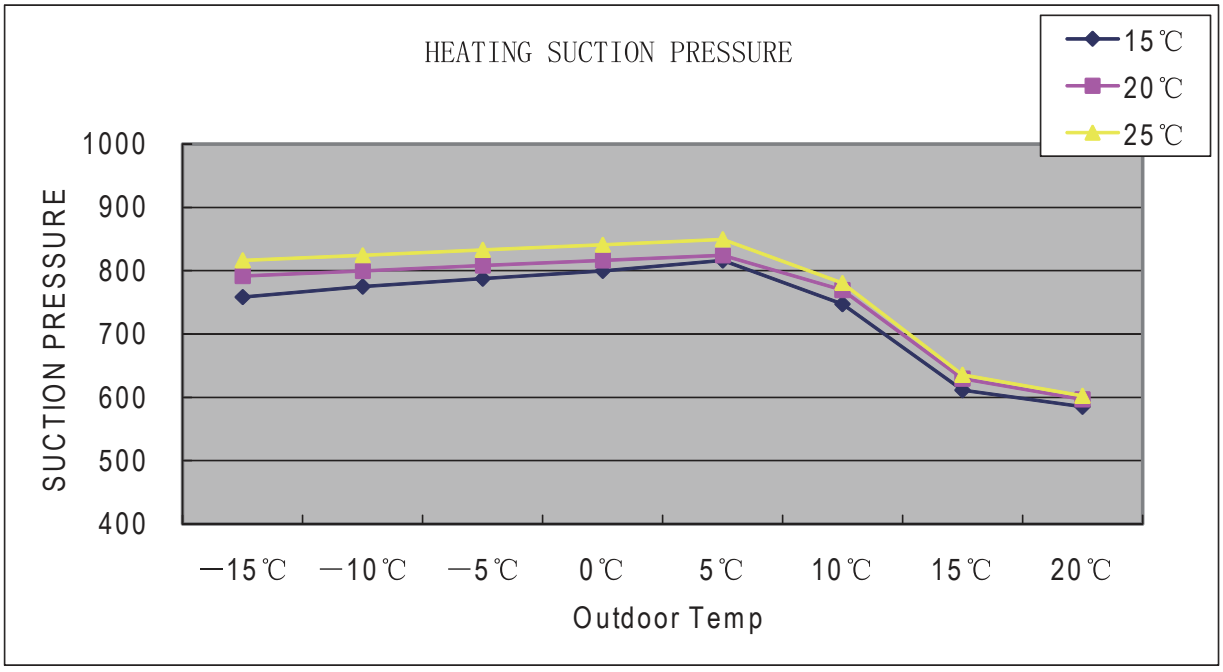

12 Sound level

Model	Sound presure level				sound power level (cooling/heating)
	230V,50Hz Cooling/heating			Measuring location Location of microphone	
	H	L	SL		
AARIA MULTI 250 P	53	/	/	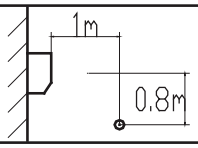	63

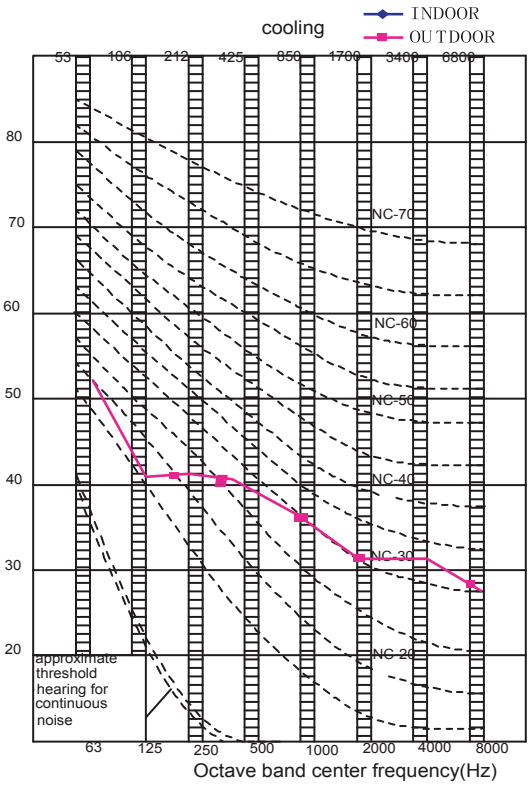

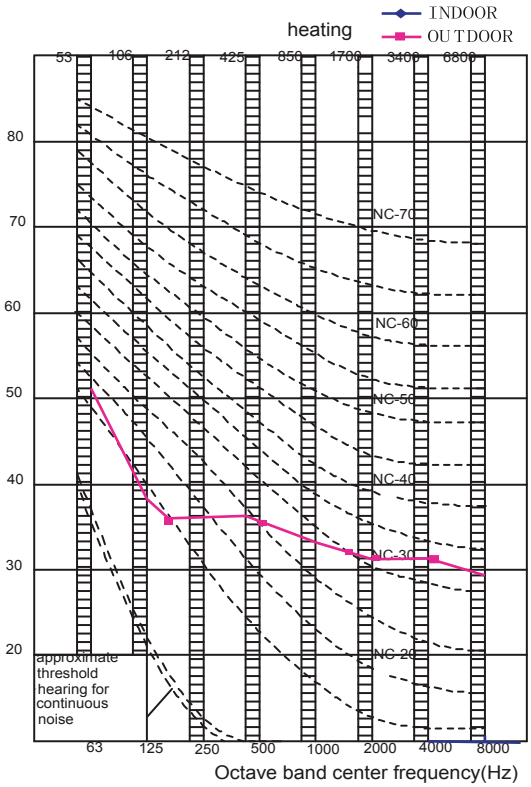

13 Circuit diagrams

13.1 Outdoor unit control board Circuit Diagrams

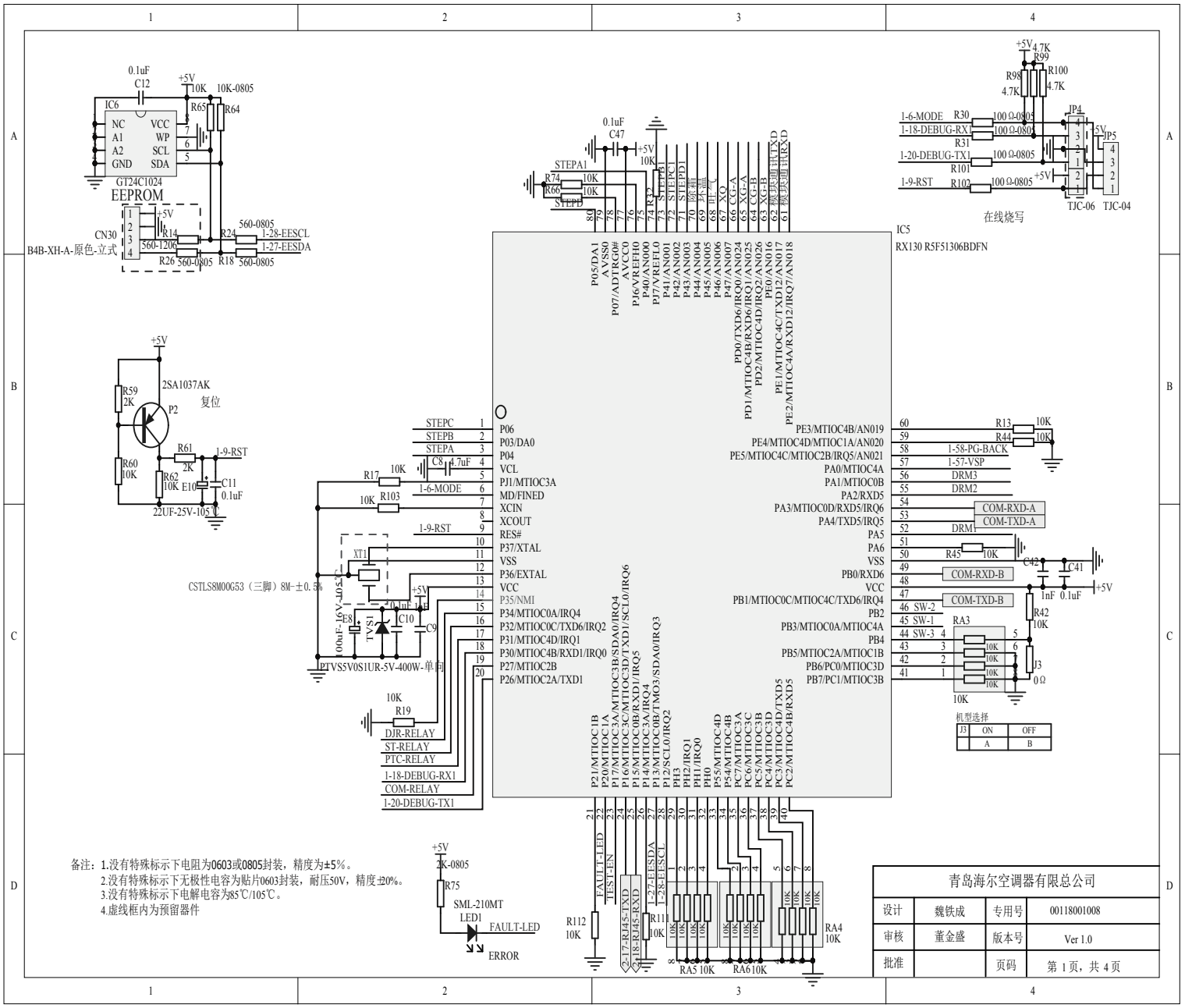

13 Circuit diagrams

13.1 Outdoor unit control board Circuit Diagrams

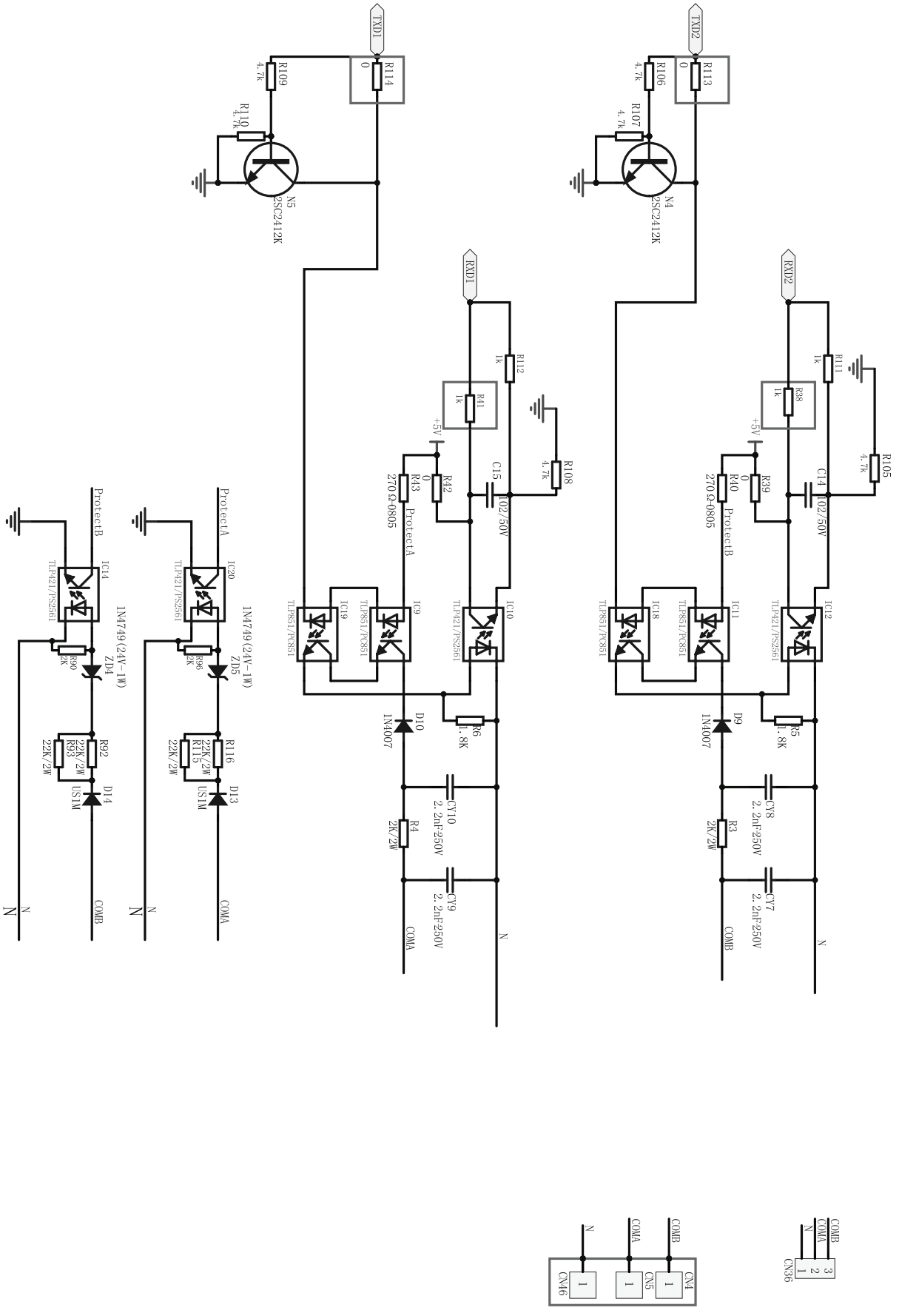

13.2 Module board Circuit Diagram

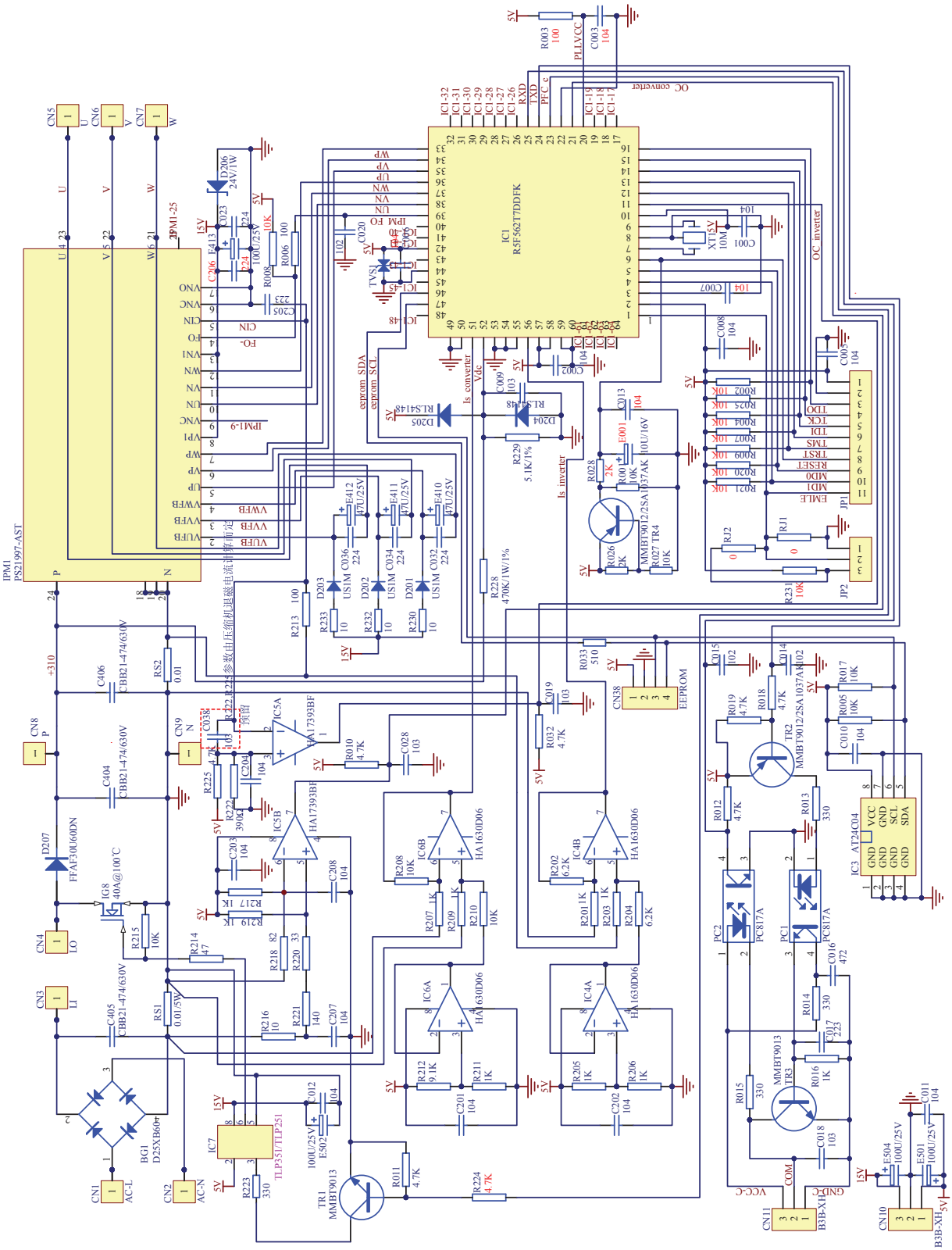

Sincere Forever